REV	DESCRIPTION	DATE

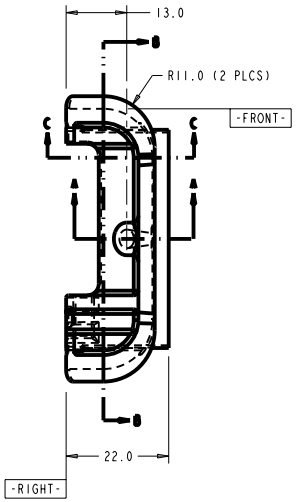

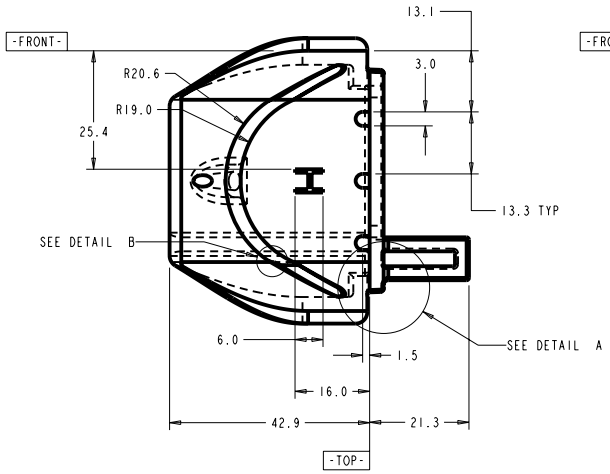

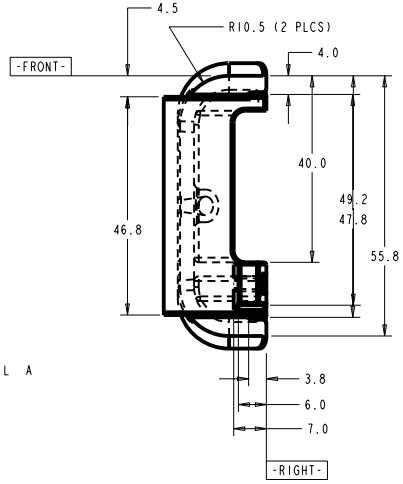

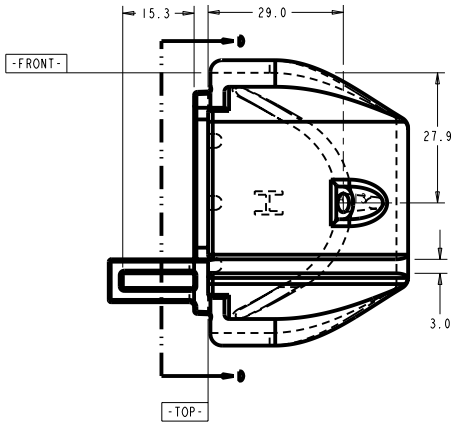

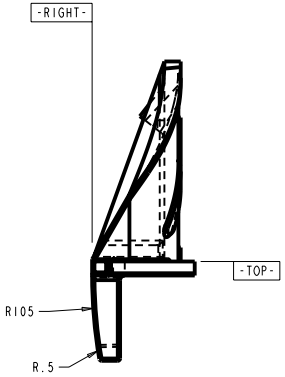

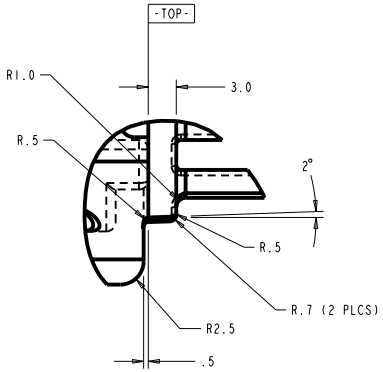

DETAIL A
SCALE 4.000

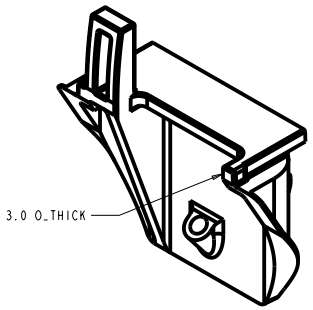

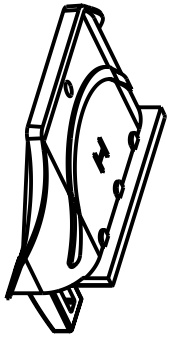

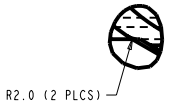

DETAIL B
SCALE 4.000

NOTES	
1	MATERIAL: TYPE I RIGID PVC, GEON M3800, BLACK
2	DO NOT USE MOLD RELEASE
3	MATERIAL REGRIND NOT TO EXCEED SUPPLIER RECOMMENDATIONS
4	PART VOLUME: 12.0 CC (.74 IN^3)
5	QUANTITIES: 400 (PROTOTYPING), 6,000 (PRODUCTION)

TOLERANCES		ORIGINATOR	T. Chase	06-Jul-07
.X	±0.1	DRAWN BY	T. Chase	06-Jul-07
.XX	±0.01	CHECKED		
.XXX	±0.001	APPROVED		
ANGLES	±0.5	USED ON: NOvA module manifolds		

NOvA Experiment (Fermilab E929)

University of Minnesota

Manifold Side Seal, Right, Horizontal

Model Type:	Model File Name:	Drawing File Name:
PART	MANIF_SIDE_SEAL_RIGHT_HORIZ	MANIF_SIDE_SEAL_RIGHT_HORIZ
Scale	Drawing Number	Revision / Sheet
2.000:1		1 of 2

Finish

All dimensions are in mm unless specified otherwise