| REV | DESCRIPTION | DATE |
|---|---|---|

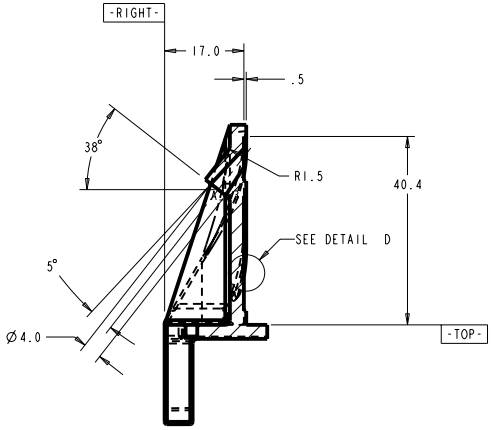


SECTION A-A

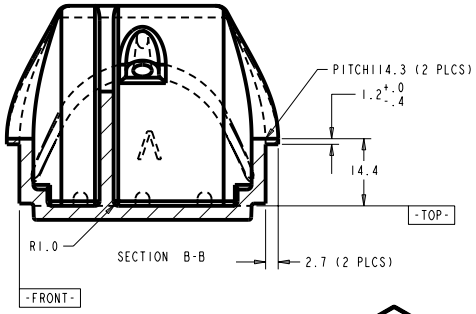


SECTION B-B

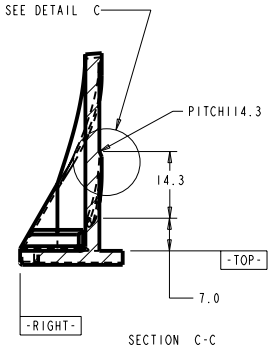


SECTION C-C

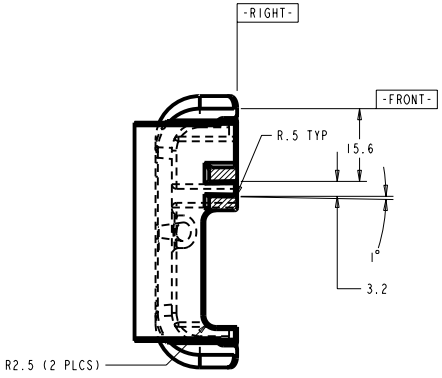


SECTION D-D

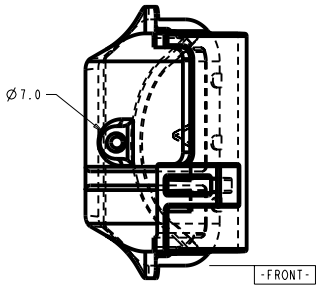


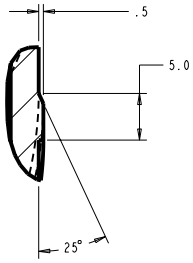


DETAIL C
SCALE 4.000

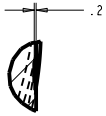


DETAIL D
SCALE 4.000

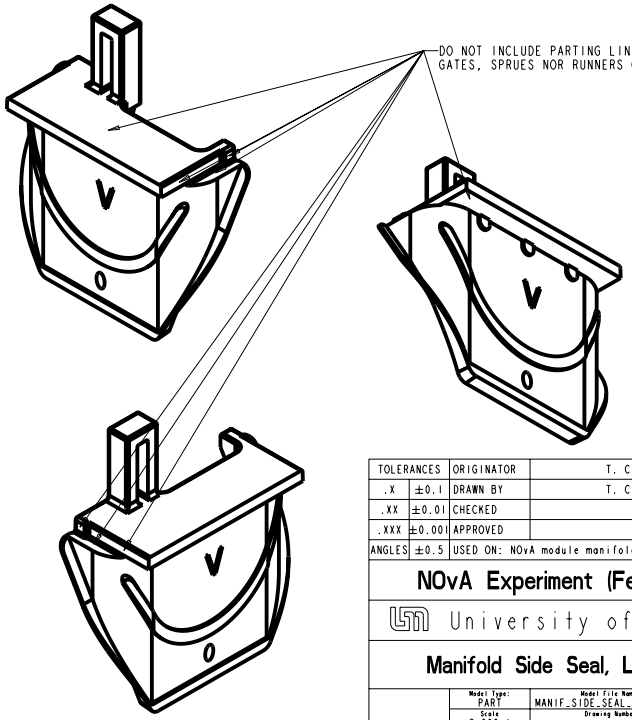


| TOLERANCES | | ORIGINATOR | T. Chase | 09-Jul-07 |
|---|---|---|---|---|
| .X | ±0.1 | DRAWN BY | T. Chase | 09-Jul-07 |
| .XX | ±0.01 | CHECKED | | |
| .XXX | ±0.001 | APPROVED | | |
| ANGLES | ±0.5 | USED ON: NOvA module manifolds | | |

**NOvA Experiment (Fermilab E929)**

University of Minnesota

**Manifold Side Seal, Left, Vertical**

| Finish | Model Type: PART | Model File Name: MANIF_SIDE_SEAL_LEFT_VERT | Drawing File Name: MANIF_SIDE_SEAL_LEFT_VERT |
|---|---|---|---|
| | Scale 2.000:1 | Drawing Number | Revision / Sheet 2 of 2 |

All dimensions are in mm unless specified otherwise