REV	DESCRIPTION	DATE

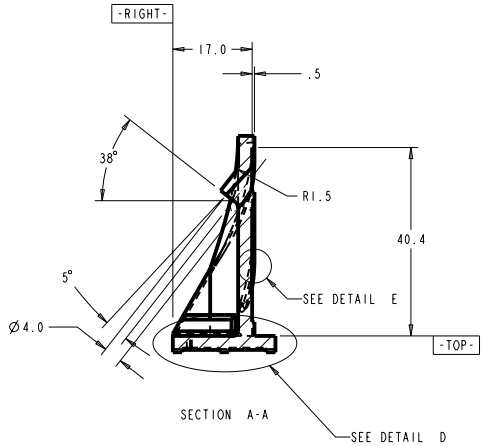

SECTION A-A

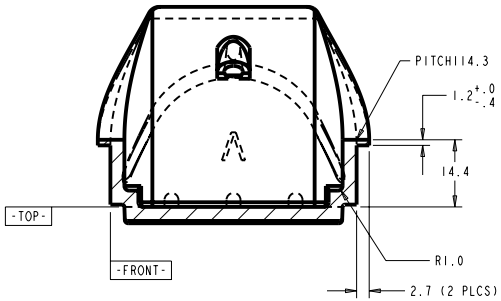

SECTION B-B

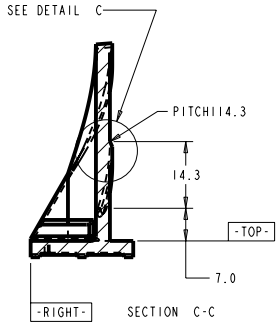

SECTION C-C

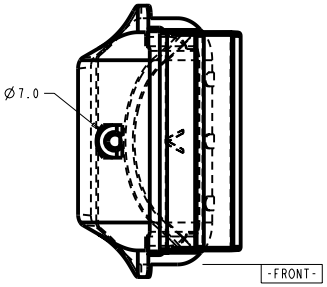

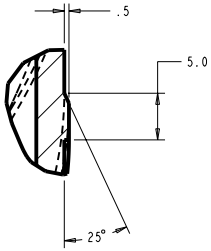

DETAIL C
SCALE 4.000

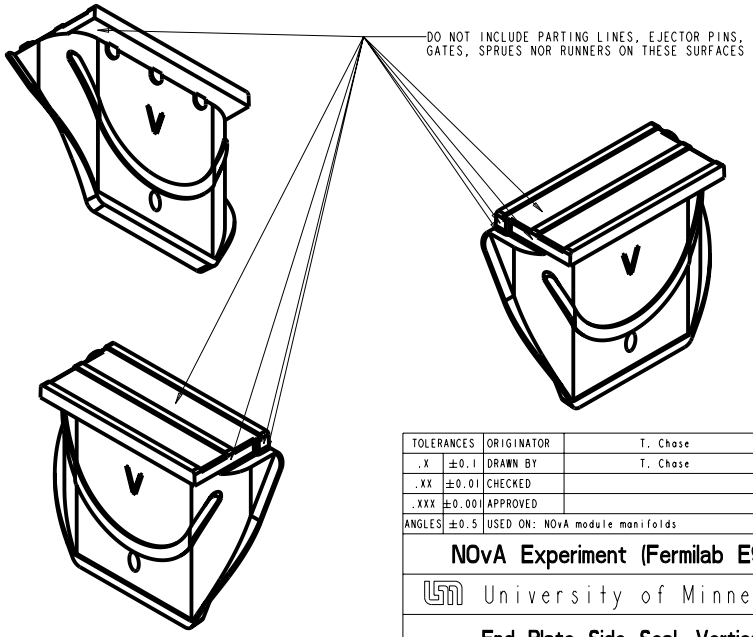

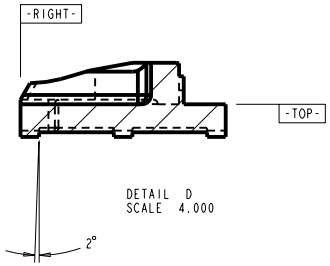

DETAIL D
SCALE 4.000

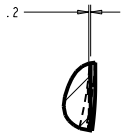

DETAIL E
SCALE 4.000

TOLERANCES		ORIGINATOR	T. Chase	09-Jul-07
.X	±0.1	DRAWN BY	T. Chase	09-Jul-07
.XX	±0.01	CHECKED		
.XXX	±0.001	APPROVED		
ANGLES	±0.5	USED ON: NOvA module manifolds		

NOvA Experiment (Fermilab E929)

University of Minnesota

End Plate Side Seal, Vertical

Finish	Model Type: PART	Model File Name: END_PLATE_SIDE_SEAL_VERT	Drawing File Name: END_PLATE_SIDE_SEAL_VERT
	Scale 2.000:1	Drawing Number	Revision / Sheet 2 of 2

All dimensions are in mm unless specified otherwise