REV	DESCRIPTION	DATE

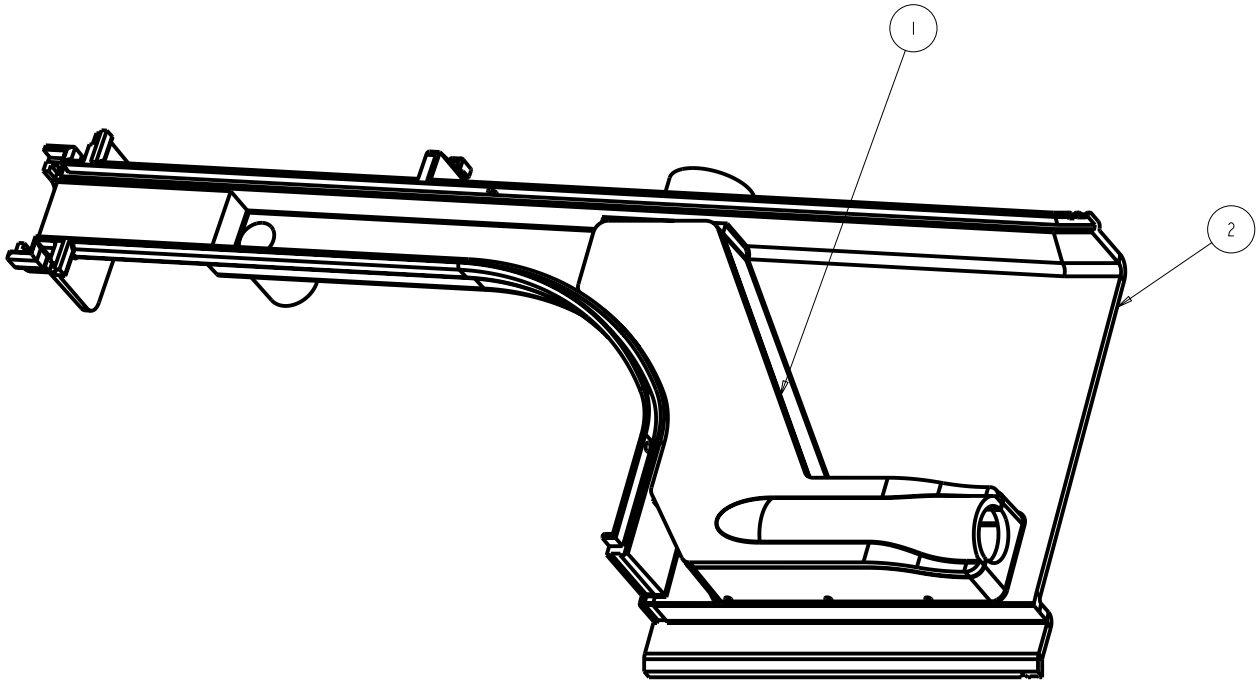

BILL OF MATERIALS				
INDEX	COMPONENT NAME	TYPE	QTY	NOTES
1	IPND_PIC_TUBE_MANIF	PART	1	
2	IPND_SNOUT_FRONT	PART	1	

NOTES	
1	ULTRASONICALLY WELD IPND_PIC_TUBE_MANIF TO REAR OF IPND_SNOUT_FRONT
2	QUANTITY: 700 (PROTOTYPING), 14,000 (PRODUCTION)

TOLERANCES		ORIGINATOR	T. Chase	12-Jun-09
.X	±0.1	DRAWN BY	T. Chase	12-Jun-09
.XX	±0.01	CHECKED		
.XXX	±0.001	APPROVED		
ANGLES	±0.5	USED ON: IPND Modules		

NOvA Experiment (Fermilab E929)

UNIVERSITY OF MINNESOTA

IPND Snout, Front, Assembly

Model Type:	Model File Name:	Drawing File Name:
ASSEM	IPND_SNOUT_FRONT_ASSEM	IPND_SNOUT_FRONT_ASSEM
Scale	Drawing Number	Revision / Sheet
1.000:1		1 of 1

Finish

All dimensions are in mm unless specified otherwise