REV	DESCRIPTION	DATE

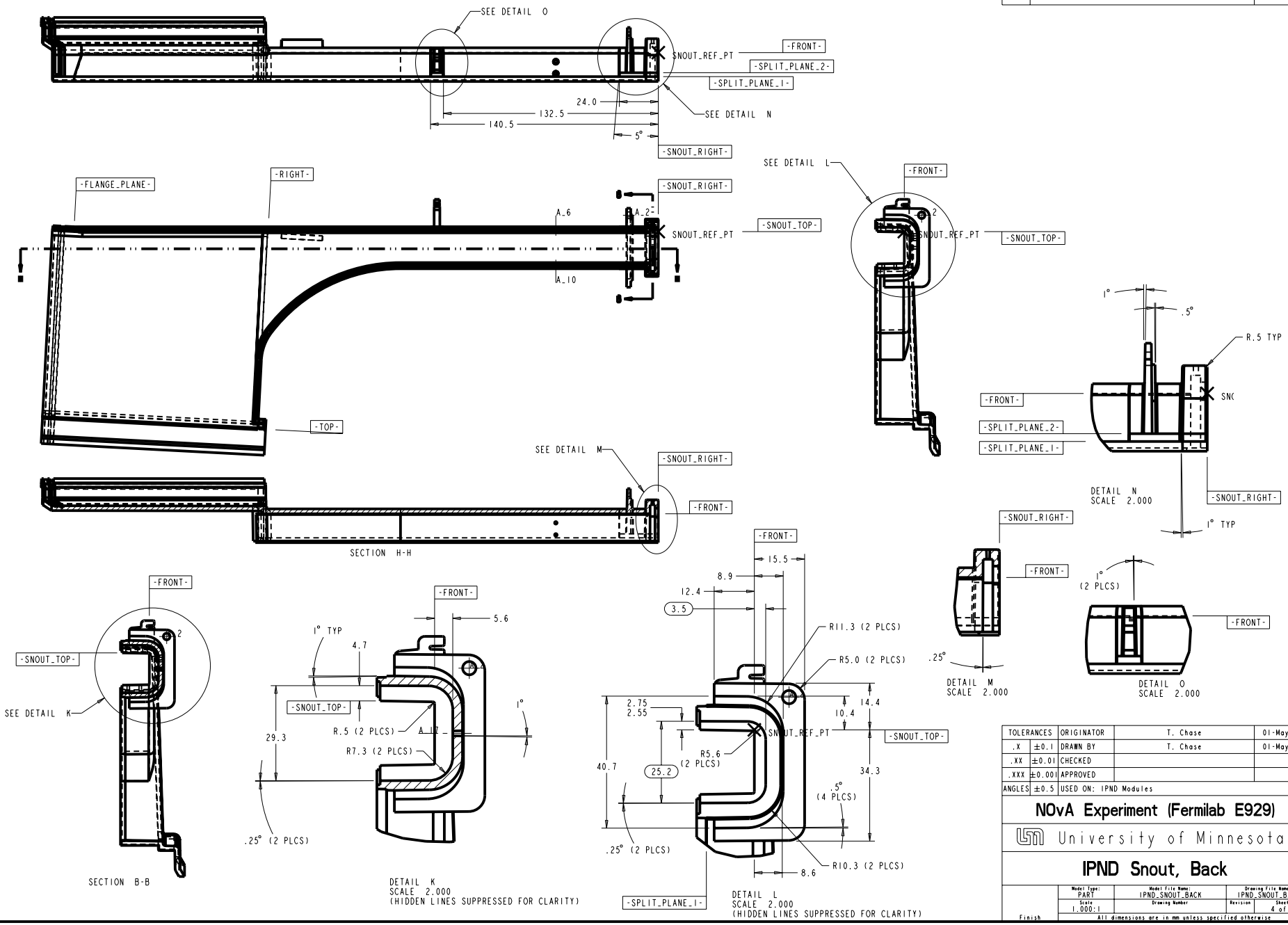

TOLERANCES		ORIGINATOR	T. Chase	01-May-09
.X	±0.1	DRAWN BY	T. Chase	01-May-09
.XX	±0.01	CHECKED		
.XXX	±0.001	APPROVED		
ANGLES	±0.5	USED ON: IPND Modules		

NOvA Experiment (Fermilab E929)

University of Minnesota

IPND Snout, Back

Finish	Model Type: PART	Model File Name: IPND_SNOUT_BACK	Drawing File Name: IPND_SNOUT_BACK
	Scale 1.000:1	Drawing Number	Revision / Sheet 4 of 6

All dimensions are in mm unless specified otherwise