REV	DESCRIPTION	DATE

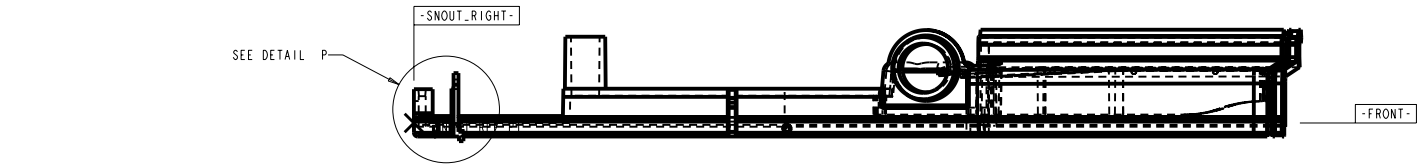

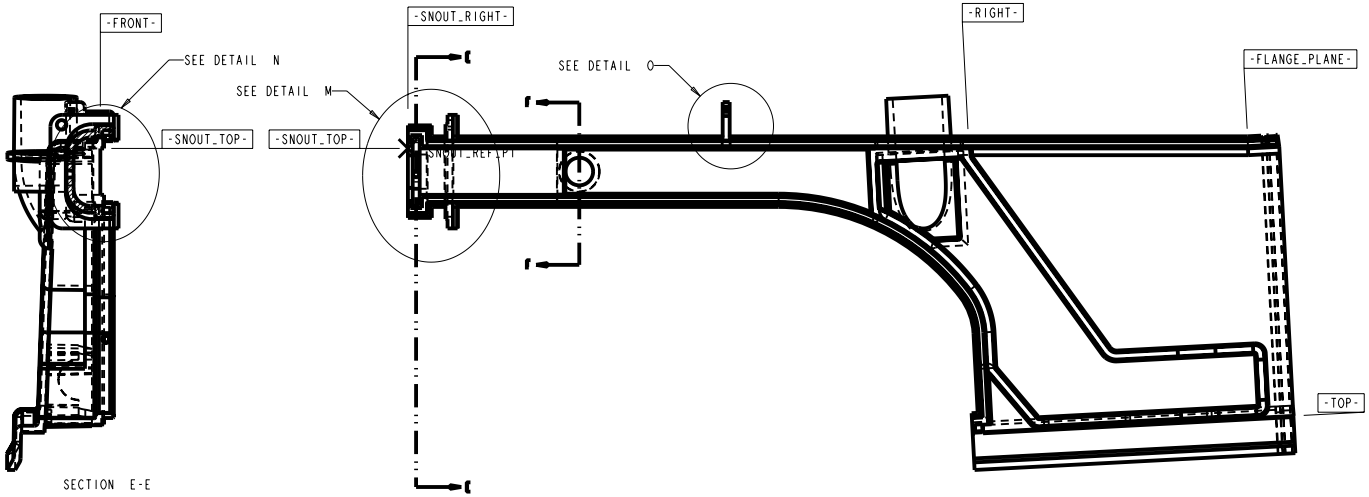

SECTION E-E

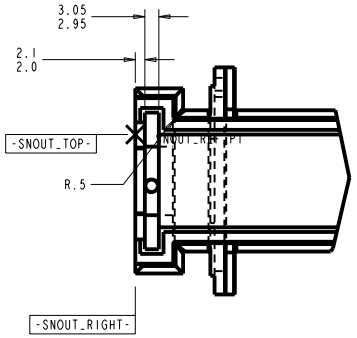

DETAIL M
SCALE 2.000

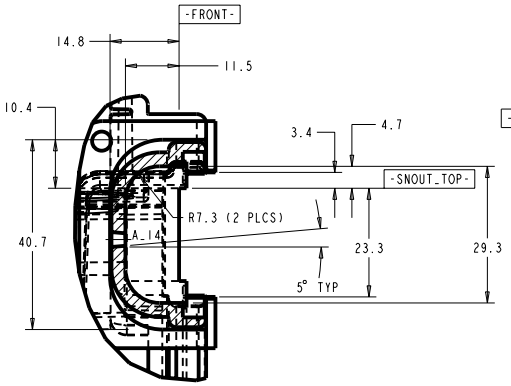

DETAIL N
SCALE 2.000

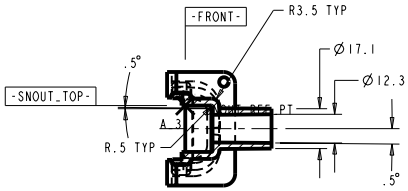

SECTION F-F

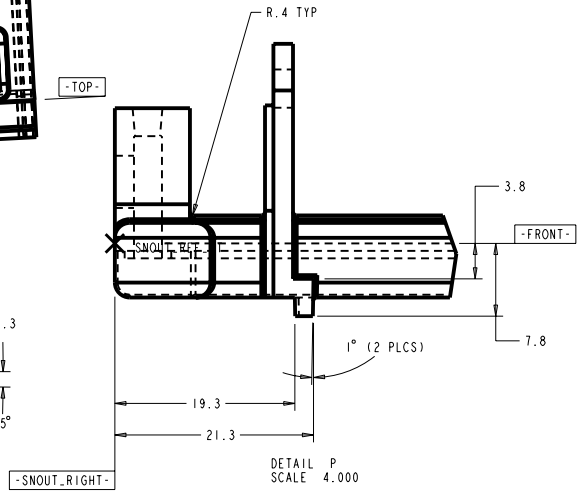

DETAIL P
SCALE 4.000

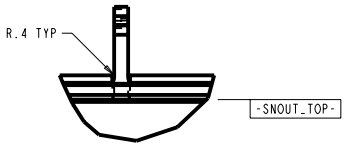

DETAIL O
SCALE 2.000

TOLERANCES		ORIGINATOR	T. Chase	05-Jun-09
.X	±0.1	DRAWN BY	T. Chase	05-Jun-09
.XX	±0.01	CHECKED		
.XXX	±0.001	APPROVED		
ANGLES	±0.5	USED ON: IPND Manifolds		

NOvA Experiment (Fermilab E929)

University of Minnesota

IPND Snout, Front

Model Type:	Model File Name:	Drawing File Name:
PART	IPND_SNOUT_FRONT	IPND_SNOUT_FRONT
Scale: 1.000:1	Drawing Number	Revision / Sheet: 6 of 8

Finish

All dimensions are in mm unless specified otherwise