REV	DESCRIPTION	DATE

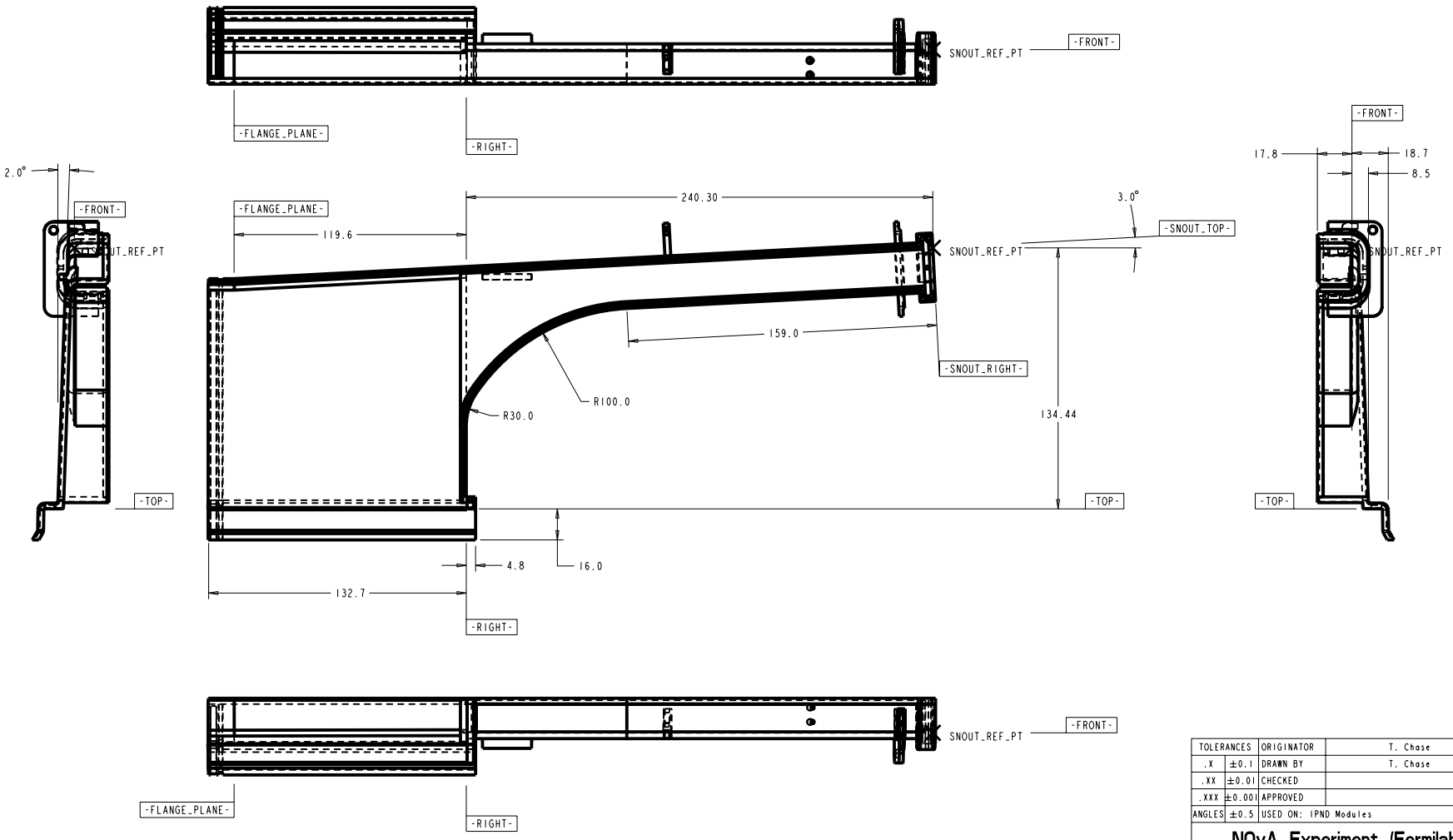

NOTES	
1	MATERIAL: TYPE I RIGID PVC, GEON M3800, BLACK
2	DO NOT USE MOLD RELEASE
3	MATERIAL REGRIND NOT TO EXCEED SUPPLIER RECOMMENDATIONS
4	PART VOLUME: 120 CC (7.35 IN^3)
5	QUANTITIES: 700 (PROTOTYPING), 14,000 (PRODUCTION)

TOLERANCES		ORIGINATOR	T. Chase	26-Apr-09
.X	±0.1	DRAWN BY	T. Chase	26-Apr-09
.XX	±0.01	CHECKED		
.XXX	±0.001	APPROVED		
ANGLES	±0.5	USED ON: IPND Modules		

NOvA Experiment (Fermilab E929)

University of Minnesota

IPND Snout, Back

Model Type:	Model File Name:	Drawing File Name:
PART	IPND_SNOUT_BACK	IPND_SNOUT_BACK
Scale: 1.000:1	Drawing Number	Revision / Sheet: 1 of 6

Finish

All dimensions are in mm unless specified otherwise