REV	DESCRIPTION	DATE

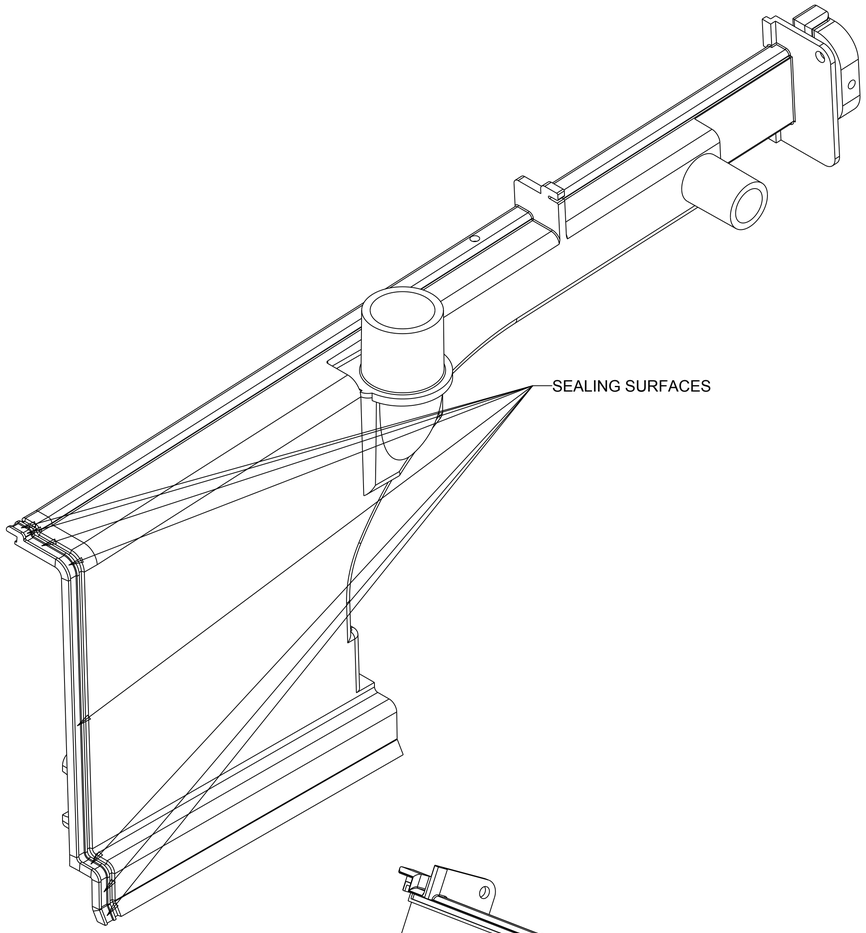

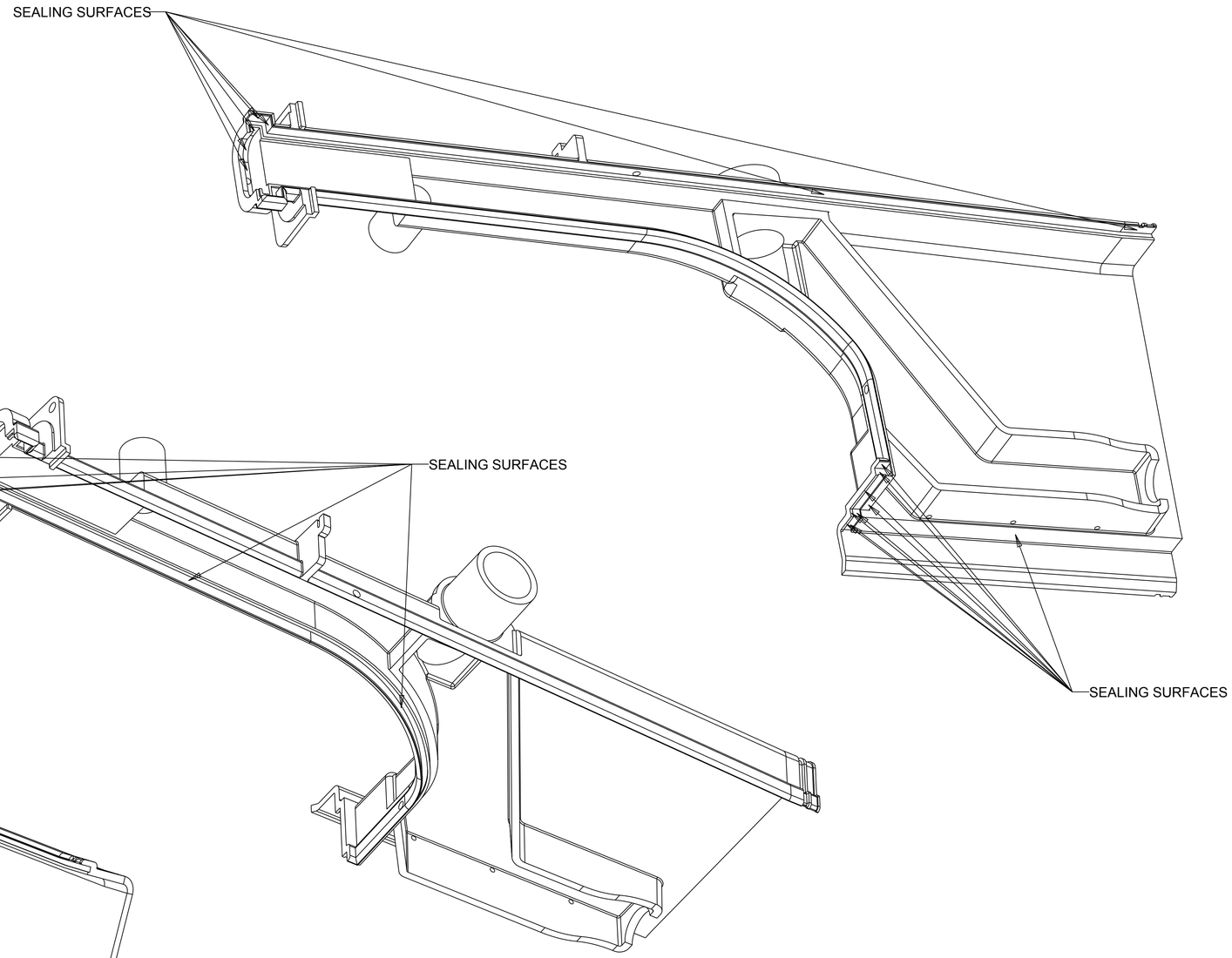

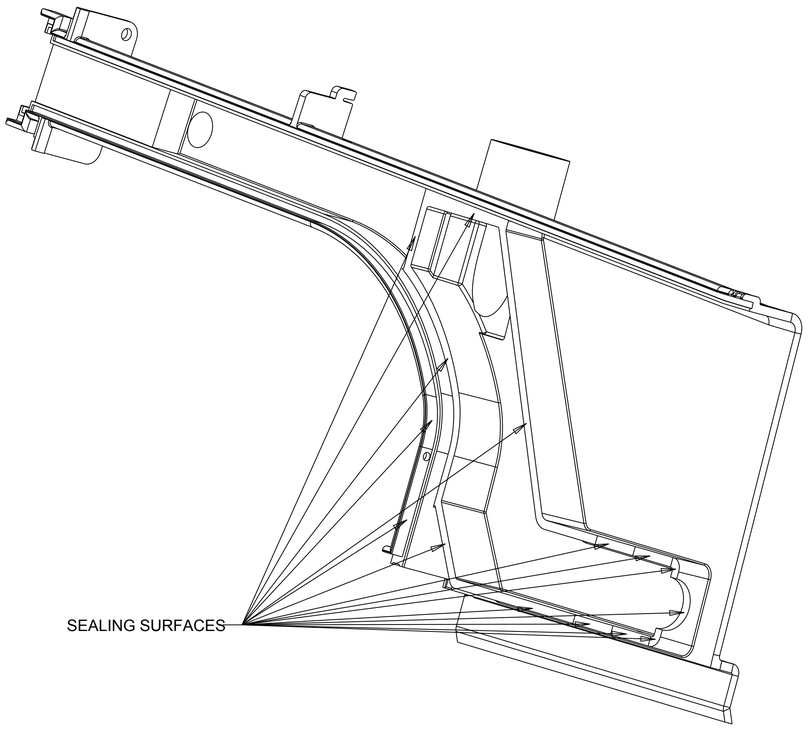

NOTES	
1	DO NOT PLACE EJECTOR PINS, GATES, SPRUES, NOR RUNNERS ON SEALING SURFACES

TOLERANCES		ORIGINATOR	T. Chase	12-Jun-09
.X	±0.1	DRAWN BY	T. Chase	12-Jun-09
.XX	±0.01	CHECKED		
.XXX	±0.001	APPROVED		
ANGLES	±0.5	USED ON: IPND Modules		

NOvA Experiment (Fermilab E929)

University of Minnesota

IPND Snout, Front

Model Type:	Model File Name:	Drawing File Name:	
PART	IPND_SNOUT_FRONT	IPND_SNOUT_FRONT	
Scale	Drawing Number	Revision	Sheet
1.000:1			8 of 8
Finish	All dimensions are in mm unless specified otherwise		