REV	DESCRIPTION	DATE

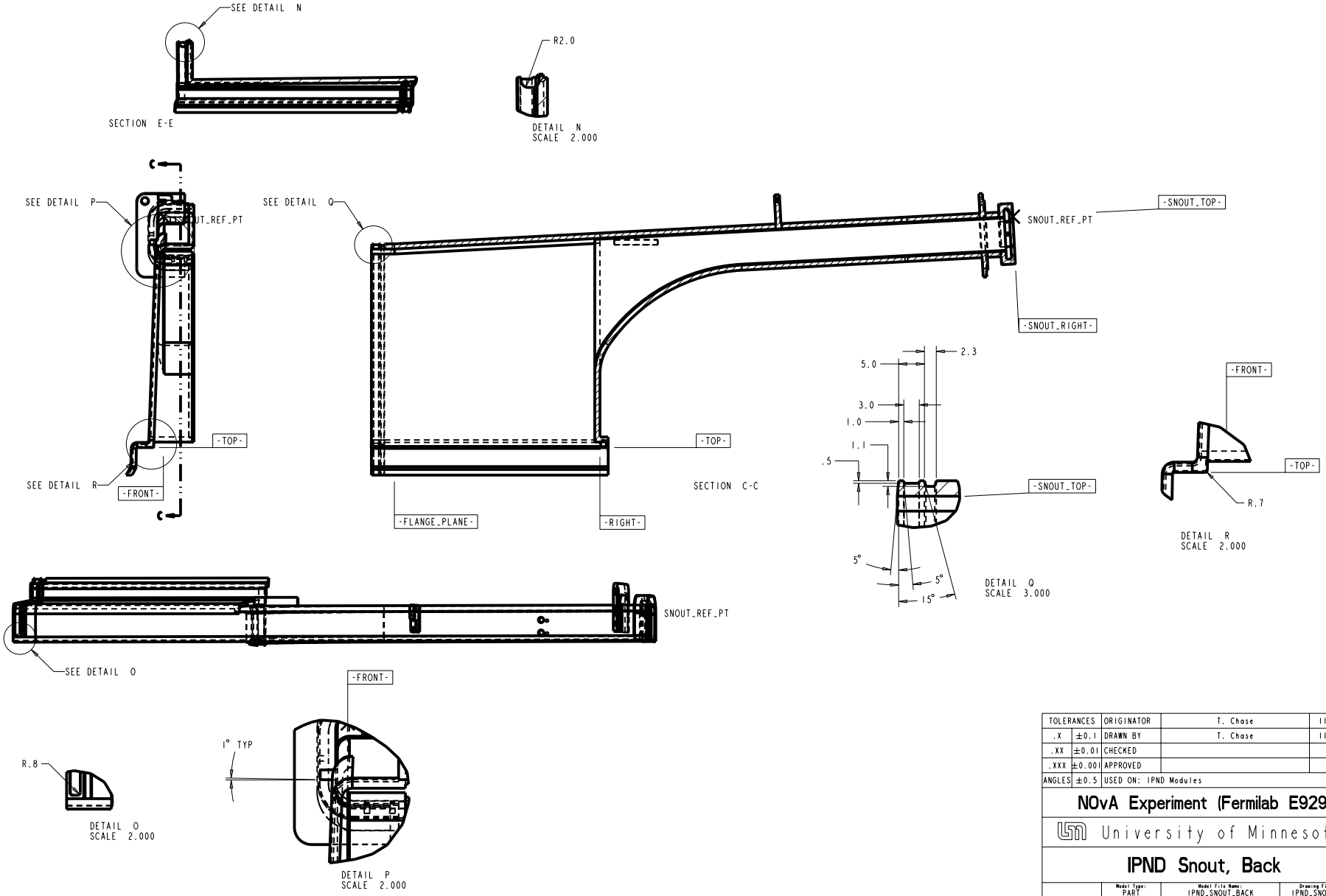

TOLERANCES		ORIGINATOR	T. Chase	11-May-09
.X	±0.1	DRAWN BY	T. Chase	11-May-09
.XX	±0.01	CHECKED		
.XXX	±0.001	APPROVED		
ANGLES	±0.5	USED ON: IPND Modules		

NOvA Experiment (Fermilab E929)

University of Minnesota

IPND Snout, Back

Model Type:	Model File Name:	Drawing File Name:
PART	IPND_SNOUT_BACK	IPND_SNOUT_BACK
Scale: 1.000:1	Drawing Number	Revision / Sheet: 5 of 6

Finish

All dimensions are in mm unless specified otherwise