REV	DESCRIPTION	DATE

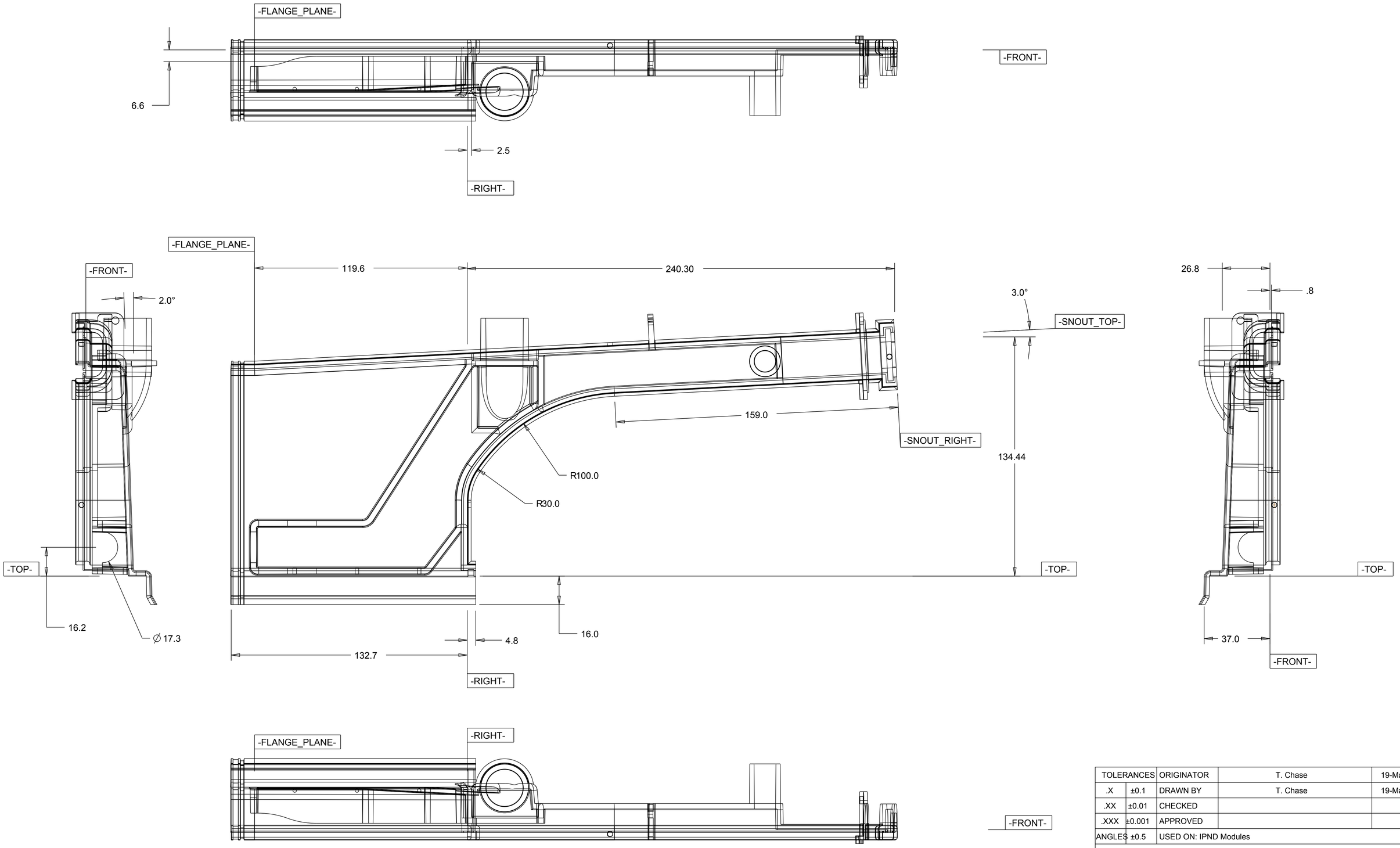

NOTES	
1	MATERIAL: TYPE I RIGID PVC, GEON M3800, BLACK
2	DO NOT USE MOLD RELEASE
3	MATERIAL REGRIND NOT TO EXCEED SUPPLIER RECOMMENDATIONS
4	PART VOLUME: 155 CC (9.46 IN^3)
5	QUANTITIES: 700 (PROTOTYPING), 14,000 (PRODUCTION)

TOLERANCES		ORIGINATOR	T. Chase	19-May-09
.X	±0.1	DRAWN BY	T. Chase	19-May-09
.XX	±0.01	CHECKED		
.XXX	±0.001	APPROVED		
ANGLES	±0.5	USED ON: IPND Modules		

NOvA Experiment (Fermilab E929)

University of Minnesota

IPND Snout, Front

Finish	Model Type: PART	Model File Name: IPND_SNOUT_FRONT	Drawing File Name: IPND_SNOUT_FRONT	
	Scale 1.000:1	Drawing Number	Revision	Sheet 1 of 8
	All dimensions are in mm unless specified otherwise			

REV	DESCRIPTION	DATE

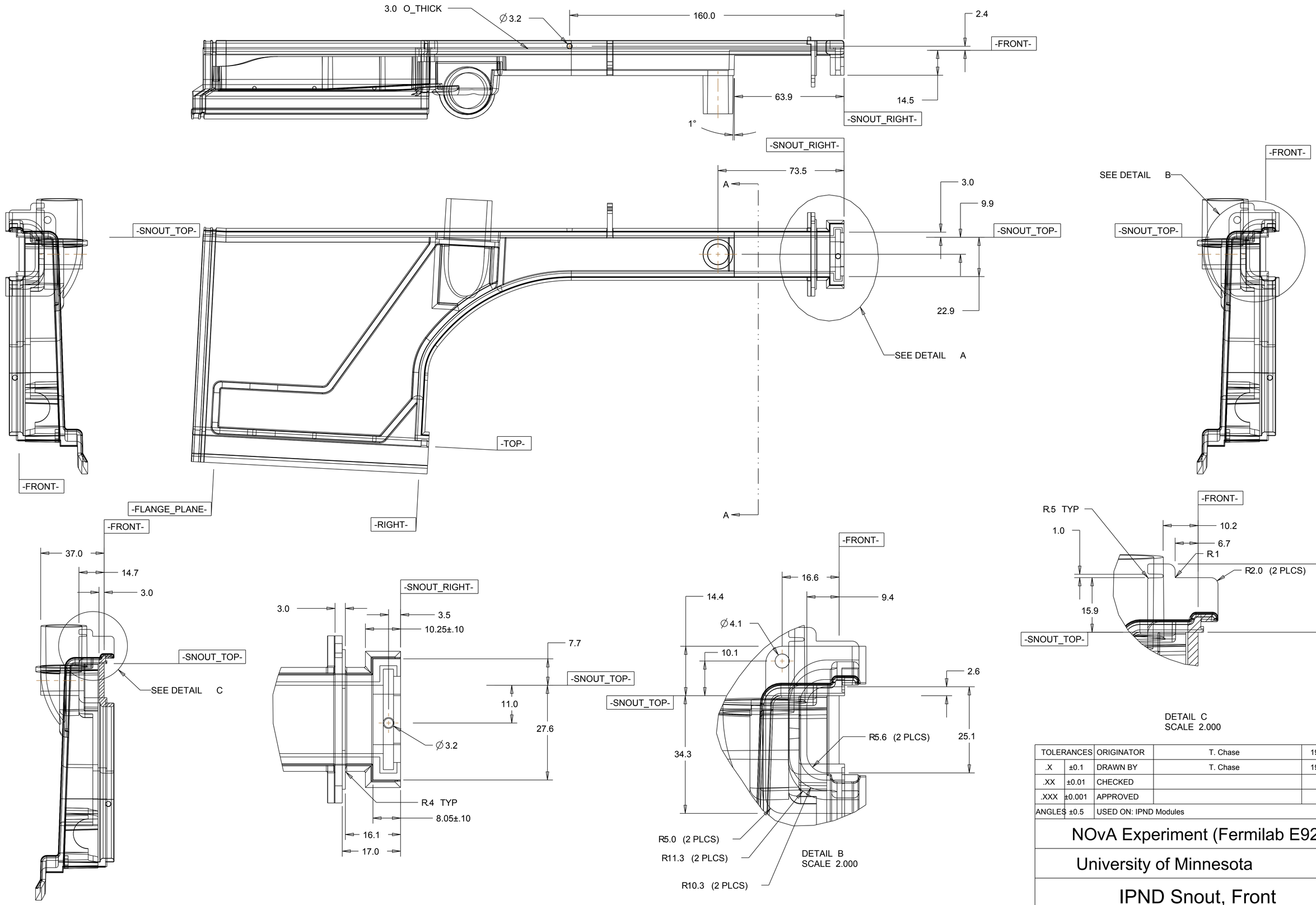

SECTION A-A

DETAIL A
SCALE 2.000

DETAIL B
SCALE 2.000

DETAIL C
SCALE 2.000

TOLERANCES		ORIGINATOR	T. Chase	19-May-09
.X	±0.1	DRAWN BY	T. Chase	19-May-09
.XX	±0.01	CHECKED		
.XXX	±0.001	APPROVED		
ANGLES	±0.5	USED ON: IPND Modules		

NOvA Experiment (Fermilab E929)

University of Minnesota

IPND Snout, Front

Finish	Model Type: PART	Model File Name: IPND_SNOUT_FRONT		Drawing File Name: IPND_SNOUT_FRONT
	Scale 1.000:1	Drawing Number	Revision	Sheet 2 of 8
	All dimensions are in mm unless specified otherwise			

REV	DESCRIPTION	DATE

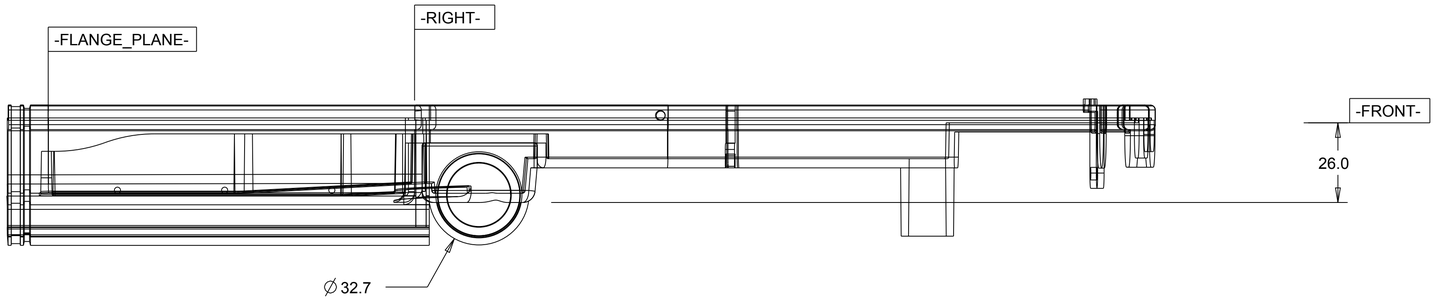

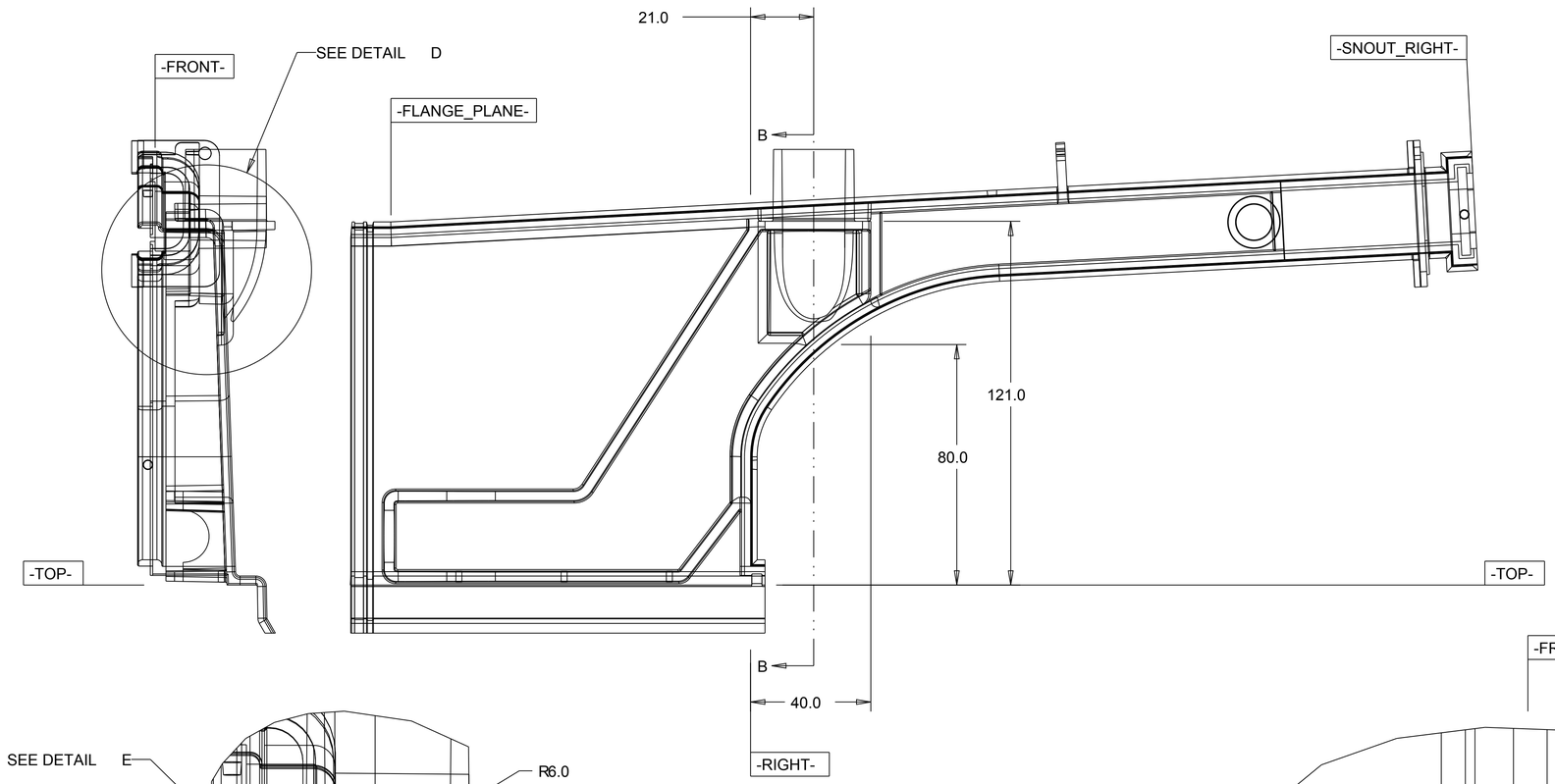

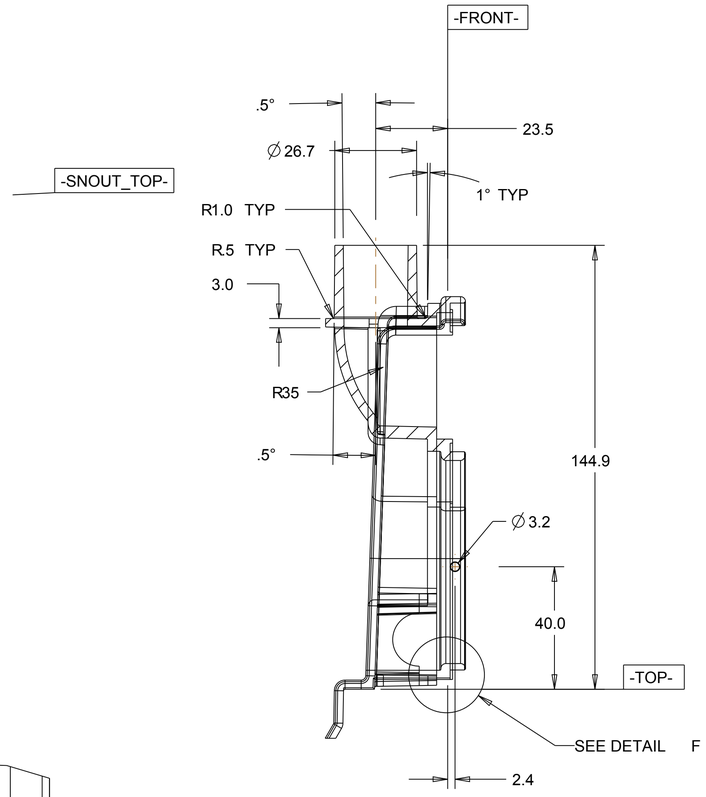

SECTION B-B

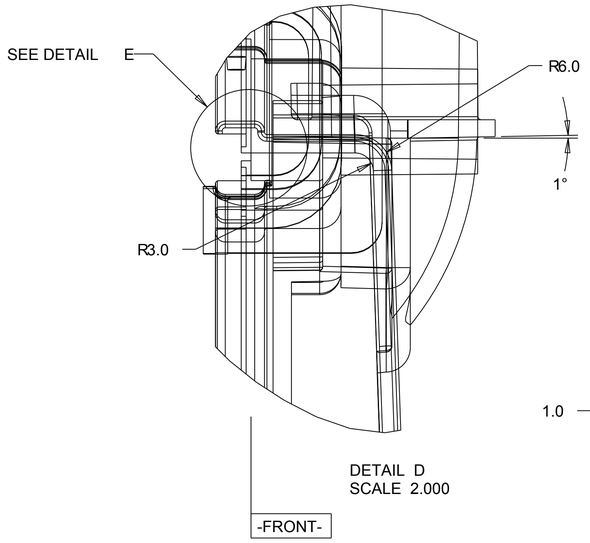

DETAIL D
SCALE 2.000

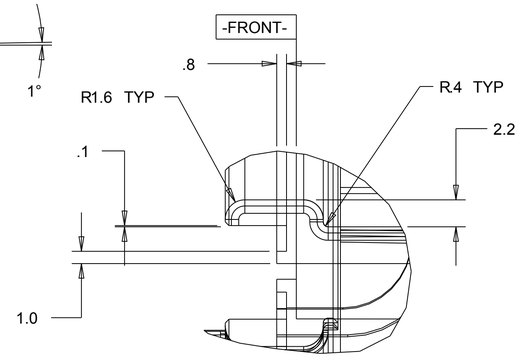

DETAIL E
SCALE 4.000

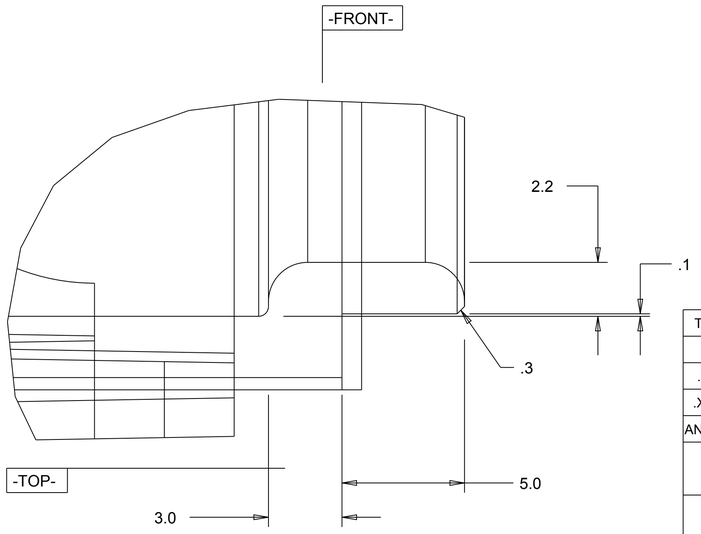

DETAIL F
SCALE 8.000

TOLERANCES		ORIGINATOR	T. Chase	26-May-09
.X	±0.1	DRAWN BY	T. Chase	26-May-09
.XX	±0.01	CHECKED		
.XXX	±0.001	APPROVED		
ANGLES	±0.5	USED ON: IPND Modules		

NOvA Experiment (Fermilab E929)

University of Minnesota

IPND Snout, Front

Model Type:	Model File Name:	Drawing File Name:	
PART	IPND_SNOUT_FRONT	IPND_SNOUT_FRONT	
Scale	Drawing Number	Revision	Sheet
1.000:1			3 of 8

Finish

All dimensions are in mm unless specified otherwise

REV	DESCRIPTION	DATE

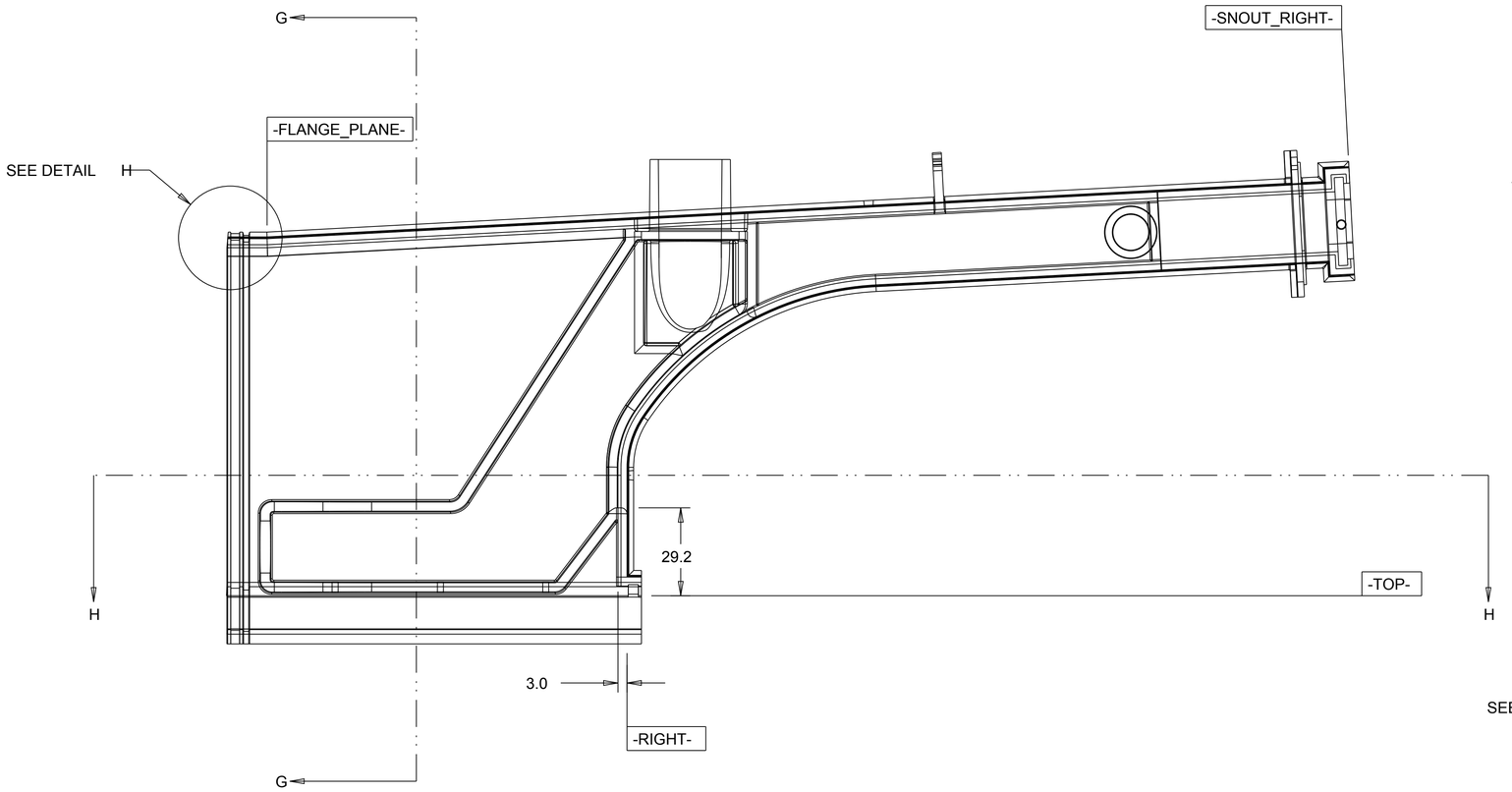

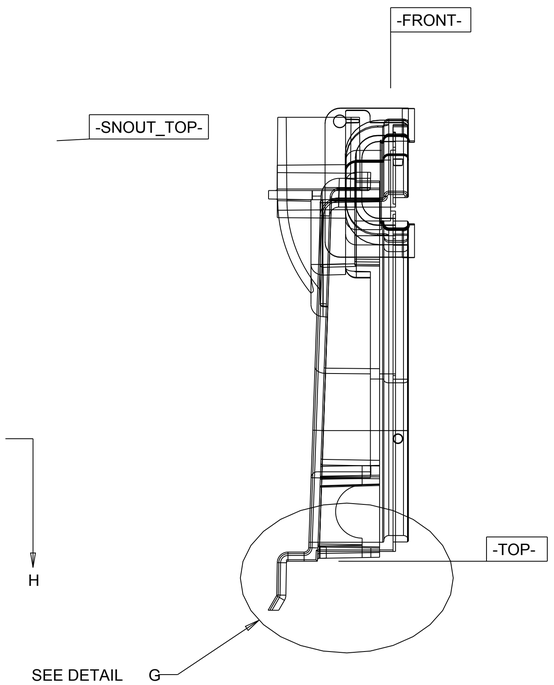

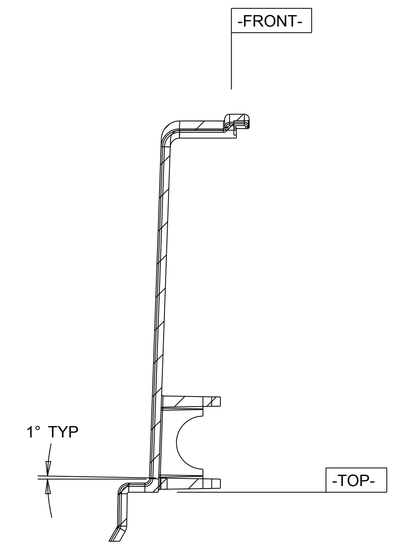

SECTION G-G

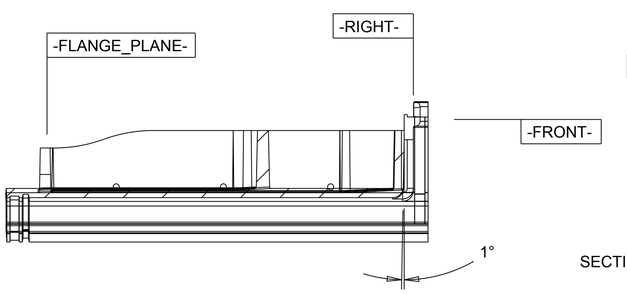

SECTION H-H

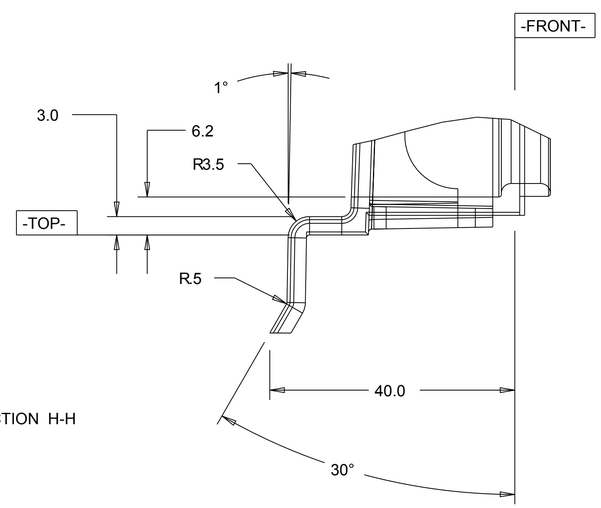

DETAIL G
SCALE 2.000

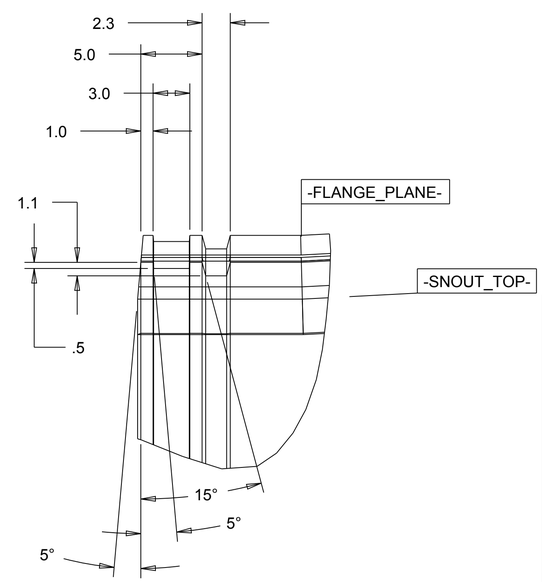

DETAIL H
SCALE 4.000

TOLERANCES		ORIGINATOR	T. Chase	28-May-09
.X	±0.1	DRAWN BY	T. Chase	28-May-09
.XX	±0.01	CHECKED		
.XXX	±0.001	APPROVED		
ANGLES	±0.5	USED ON: IPND Modules		

NOvA Experiment (Fermilab E929)

University of Minnesota

IPND Snout, Front

Model Type:	Model File Name:	Drawing File Name:	
PART	IPND_SNOUT_FRONT	IPND_SNOUT_FRONT	
Scale	Drawing Number	Revision	Sheet
1.000:1			4 of 8

Finish — All dimensions are in mm unless specified otherwise

REV	DESCRIPTION	DATE

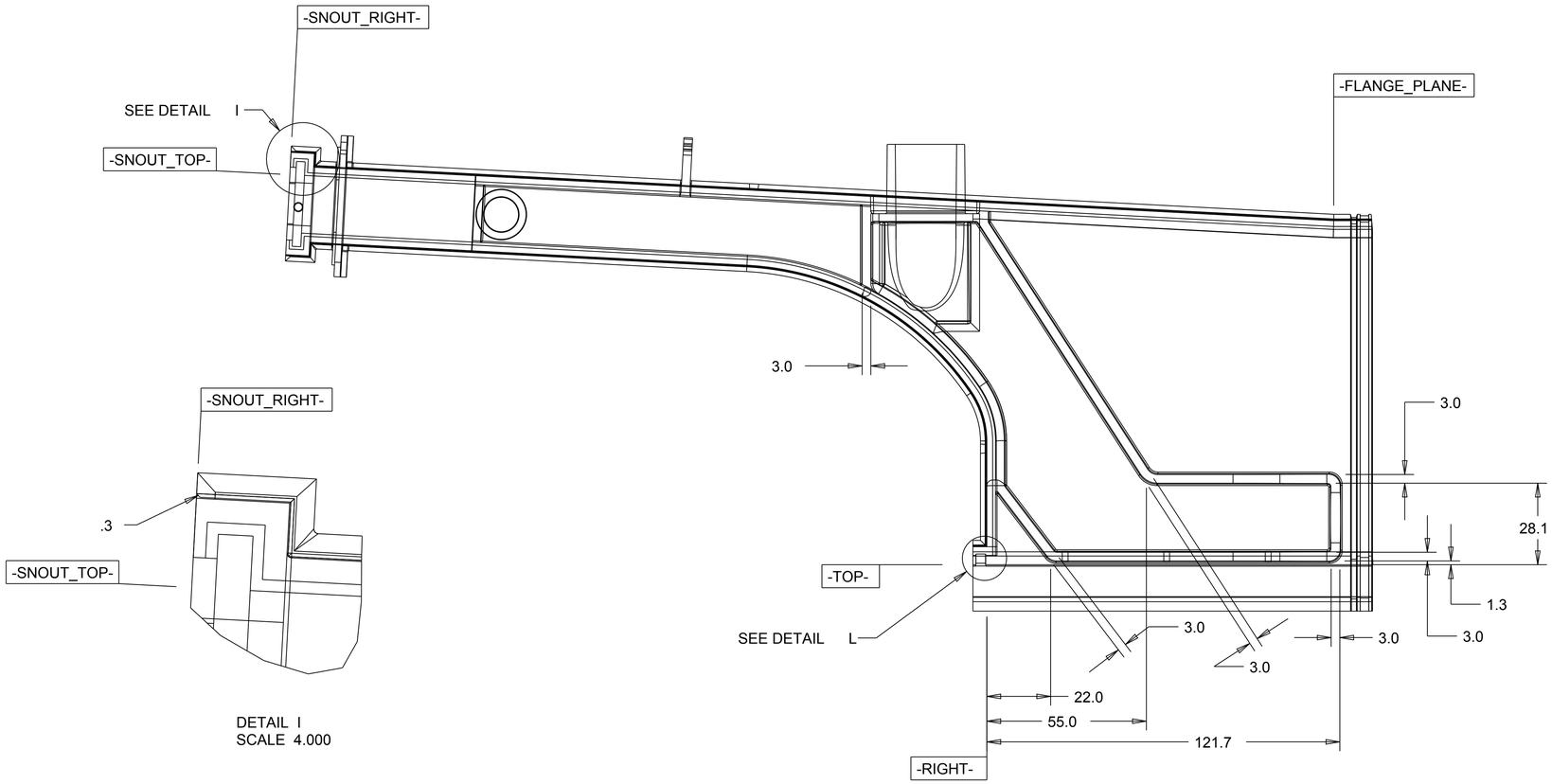

DETAIL I
SCALE 4.000

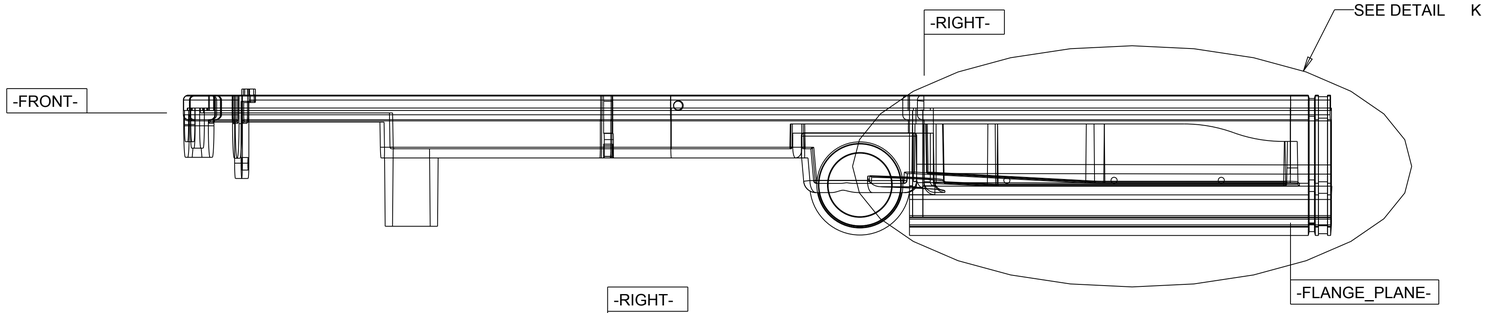

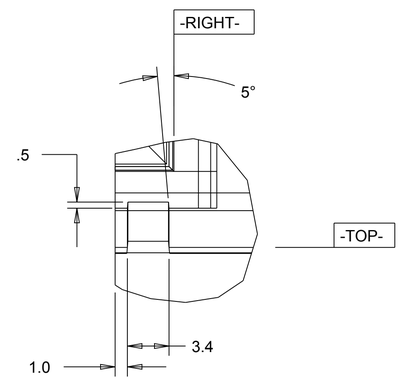

DETAIL L
SCALE 4.000

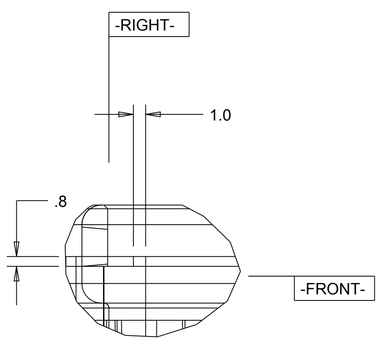

DETAIL J
SCALE 4.000

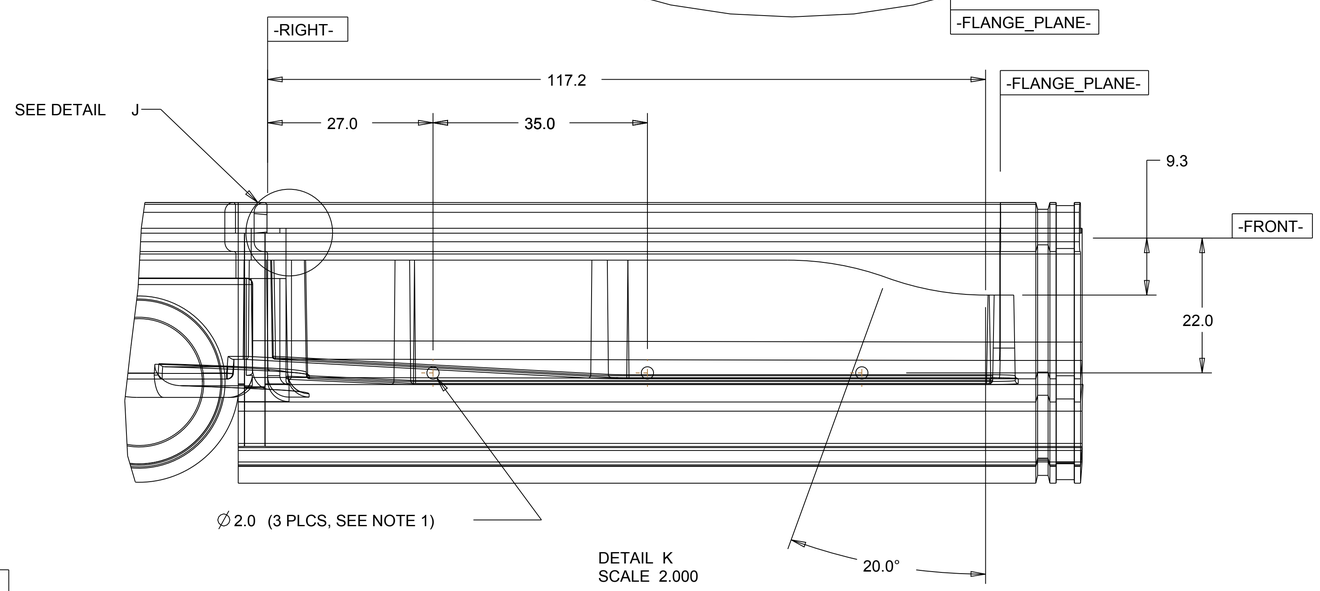

DETAIL K
SCALE 2.000

NOTES	
1	2.0 MM HOLES MAY BE EITHER DRILLED OR MOLDED

TOLERANCES		ORIGINATOR	T. Chase	05-Jun-09
.X	±0.1	DRAWN BY	T. Chase	05-Jun-09
.XX	±0.01	CHECKED		
.XXX	±0.001	APPROVED		
ANGLES	±0.5	USED ON: IPND Modules		

NOvA Experiment (Fermilab E929)

University of Minnesota

IPND Snout, Front

Finish	Model Type: PART	Model File Name: IPND_SNOUT_FRONT	Drawing File Name: IPND_SNOUT_FRONT	
	Scale 1.000:1	Drawing Number	Revision	Sheet 5 of 8
	All dimensions are in mm unless specified otherwise			

REV	DESCRIPTION	DATE

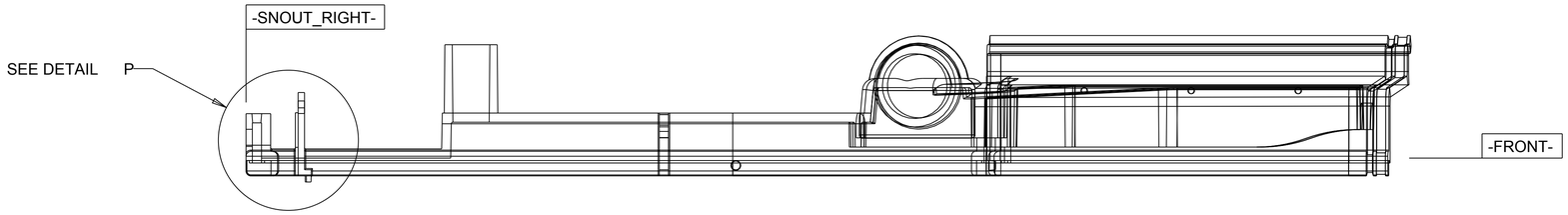

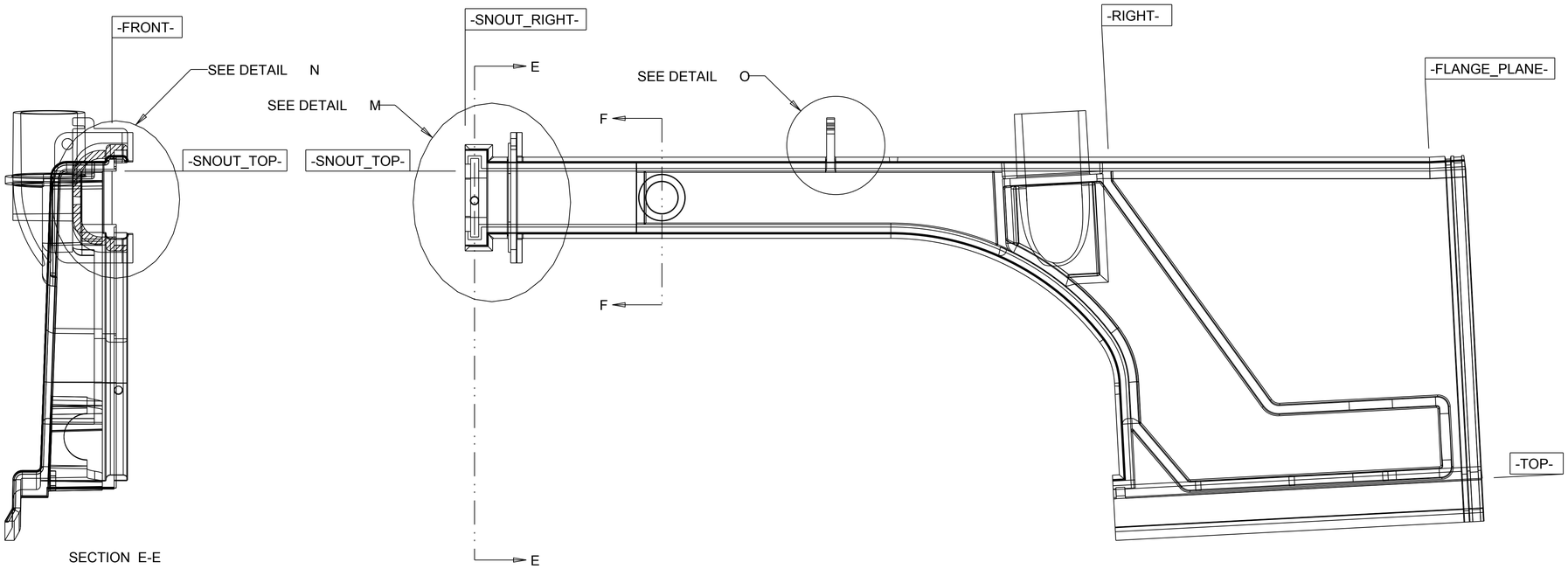

SECTION E-E

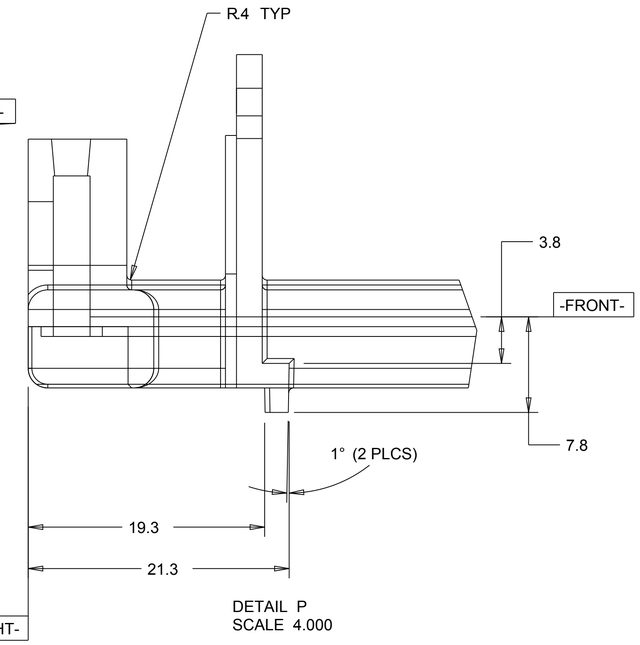

DETAIL P
SCALE 4.000

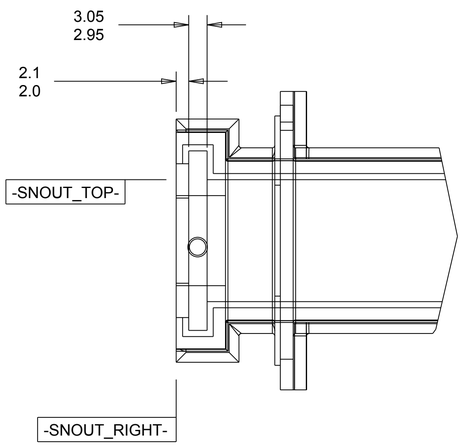

DETAIL M
SCALE 2.000

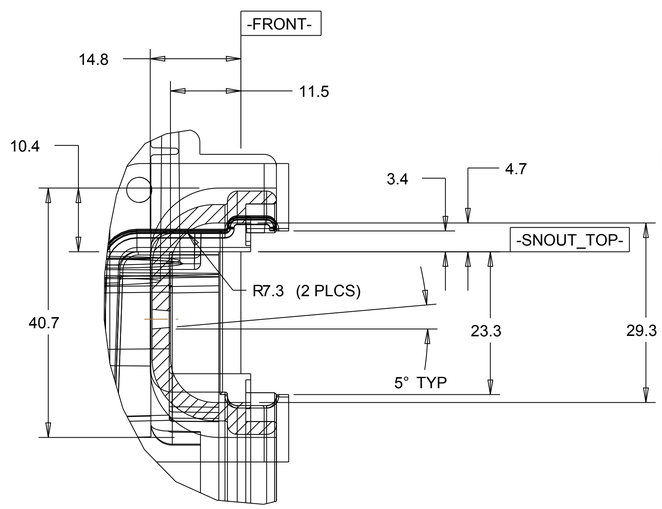

DETAIL N
SCALE 2.000

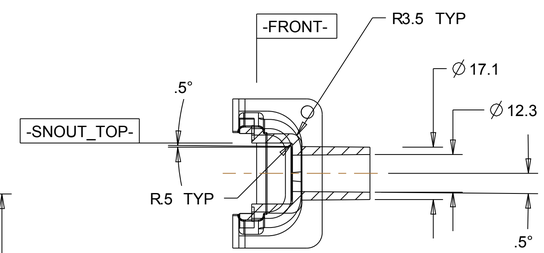

SECTION F-F

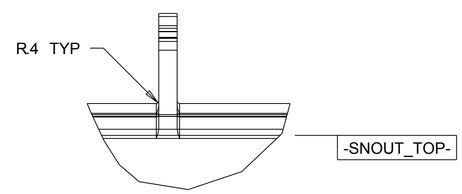

DETAIL O
SCALE 2.000

TOLERANCES		ORIGINATOR	T. Chase	05-Jun-09
.X	±0.1	DRAWN BY	T. Chase	05-Jun-09
.XX	±0.01	CHECKED		
.XXX	±0.001	APPROVED		
ANGLES	±0.5	USED ON: IPND Manifolds		

NOvA Experiment (Fermilab E929)

University of Minnesota

IPND Snout, Front

Finish	Model Type: PART	Model File Name: IPND_SNOUT_FRONT		Drawing File Name: IPND_SNOUT_FRONT
	Scale 1.000:1	Drawing Number	Revision	Sheet 6 of 8
	All dimensions are in mm unless specified otherwise			

REV	DESCRIPTION	DATE

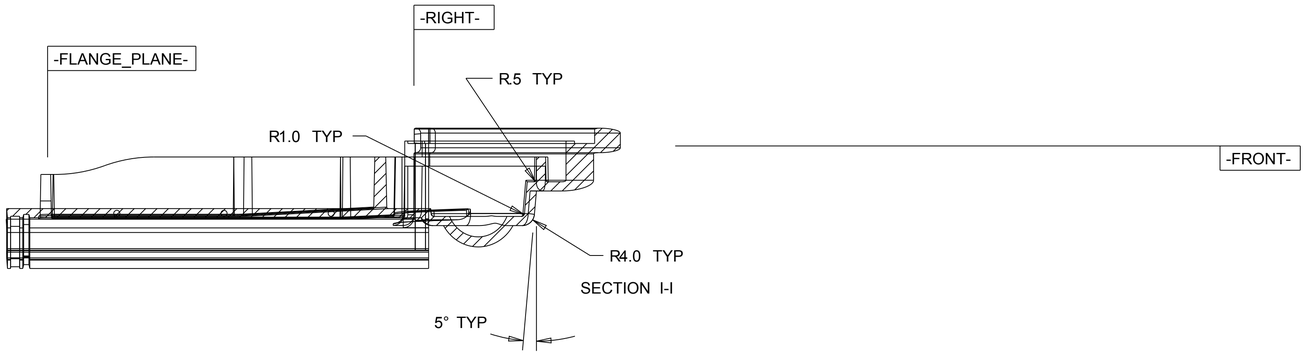

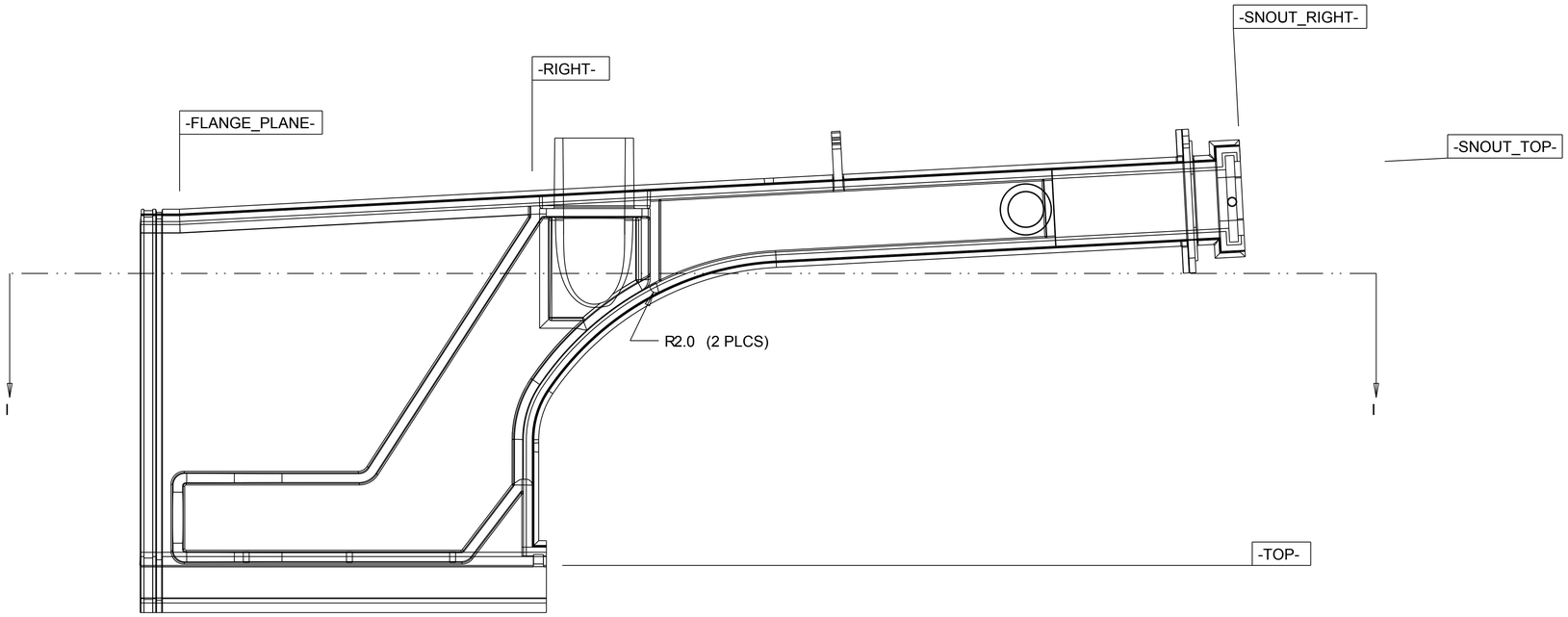

TOLERANCES		ORIGINATOR	T. Chase	11-Jun-09
.X	±0.1	DRAWN BY	T. Chase	11-Jun-09
.XX	±0.01	CHECKED		
.XXX	±0.001	APPROVED		
ANGLES	±0.5	USED ON: IPND Manifolds		

NOvA Experiment (Fermilab E929)

University of Minnesota

IPND Snout, Front

Finish	Model Type: PART	Model File Name: IPND_SNOUT_FRONT		Drawing File Name: IPND_SNOUT_FRONT
	Scale 1.000:1	Drawing Number	Revision	Sheet 7 of 8
	All dimensions are in mm unless specified otherwise			

REV	DESCRIPTION	DATE

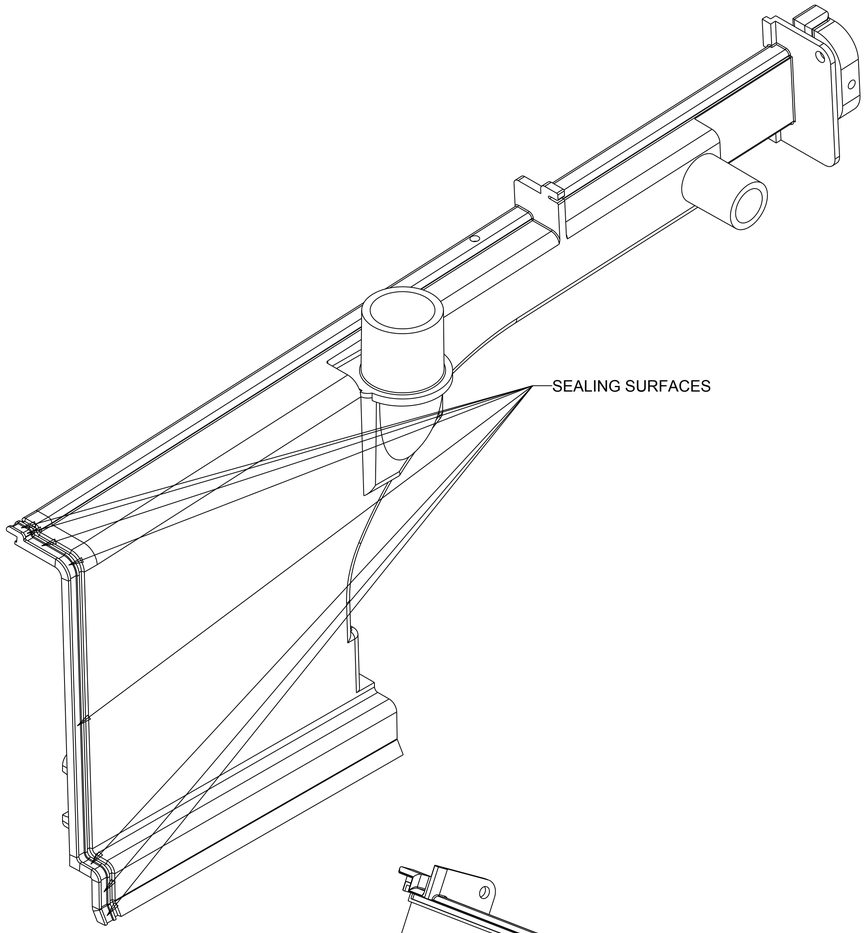

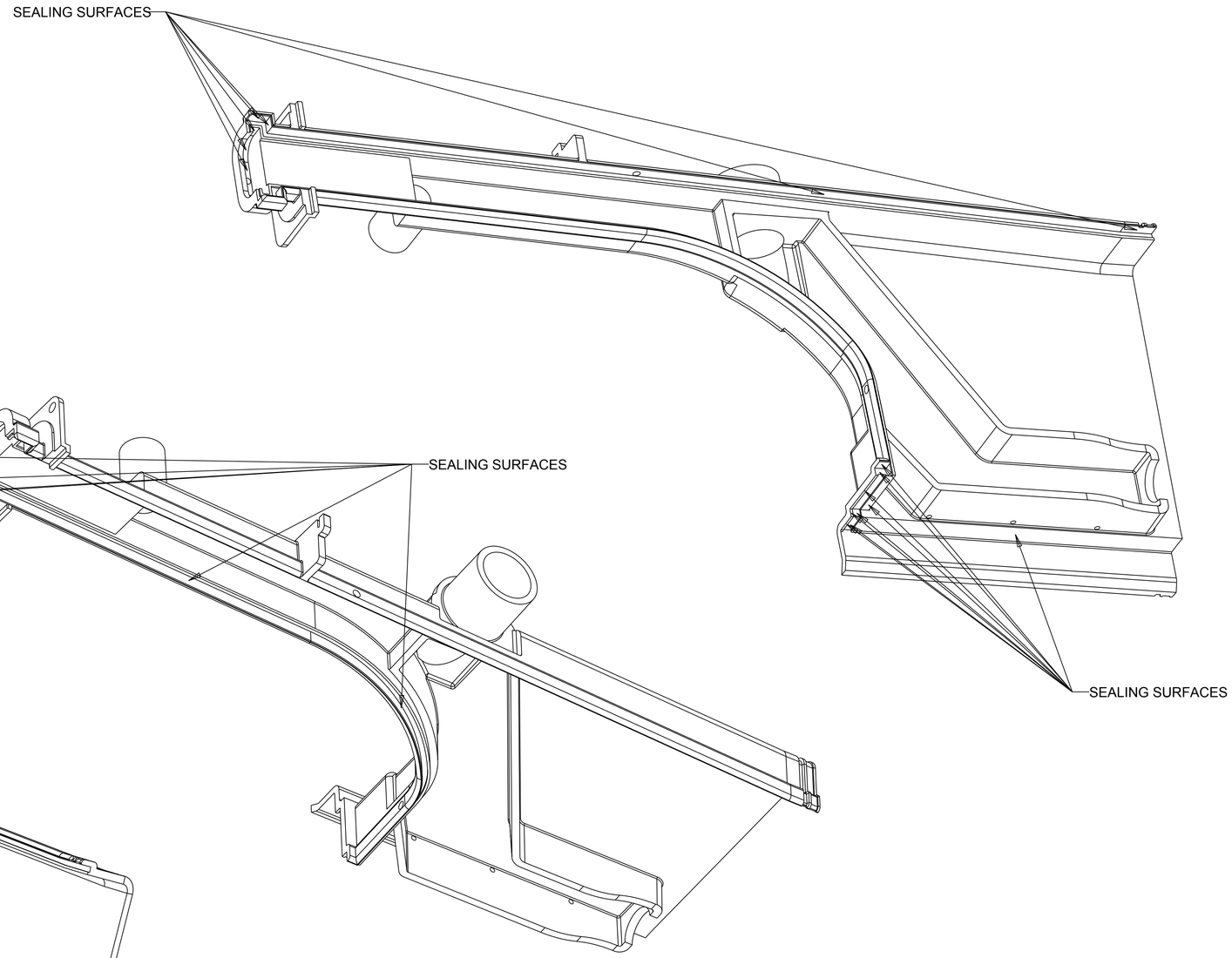

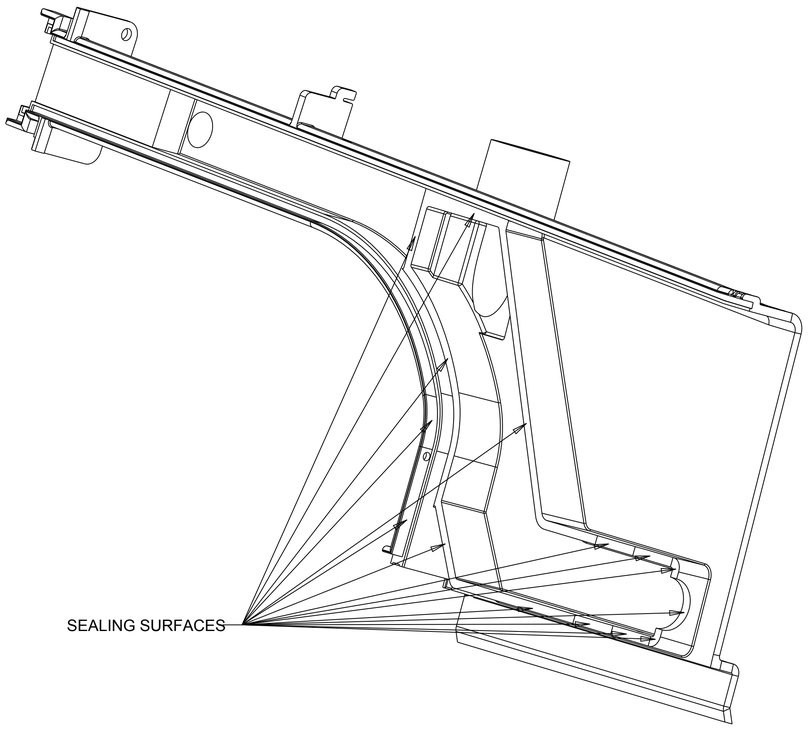

NOTES	
1	DO NOT PLACE EJECTOR PINS, GATES, SPRUES, NOR RUNNERS ON SEALING SURFACES

TOLERANCES		ORIGINATOR	T. Chase	12-Jun-09
.X	±0.1	DRAWN BY	T. Chase	12-Jun-09
.XX	±0.01	CHECKED		
.XXX	±0.001	APPROVED		
ANGLES	±0.5	USED ON: IPND Modules		

NOvA Experiment (Fermilab E929)

University of Minnesota

IPND Snout, Front

Model Type:	Model File Name:	Drawing File Name:	
PART	IPND_SNOUT_FRONT	IPND_SNOUT_FRONT	
Scale	Drawing Number	Revision	Sheet
1.000:1			8 of 8
Finish	All dimensions are in mm unless specified otherwise		