REV	DESCRIPTION	DATE

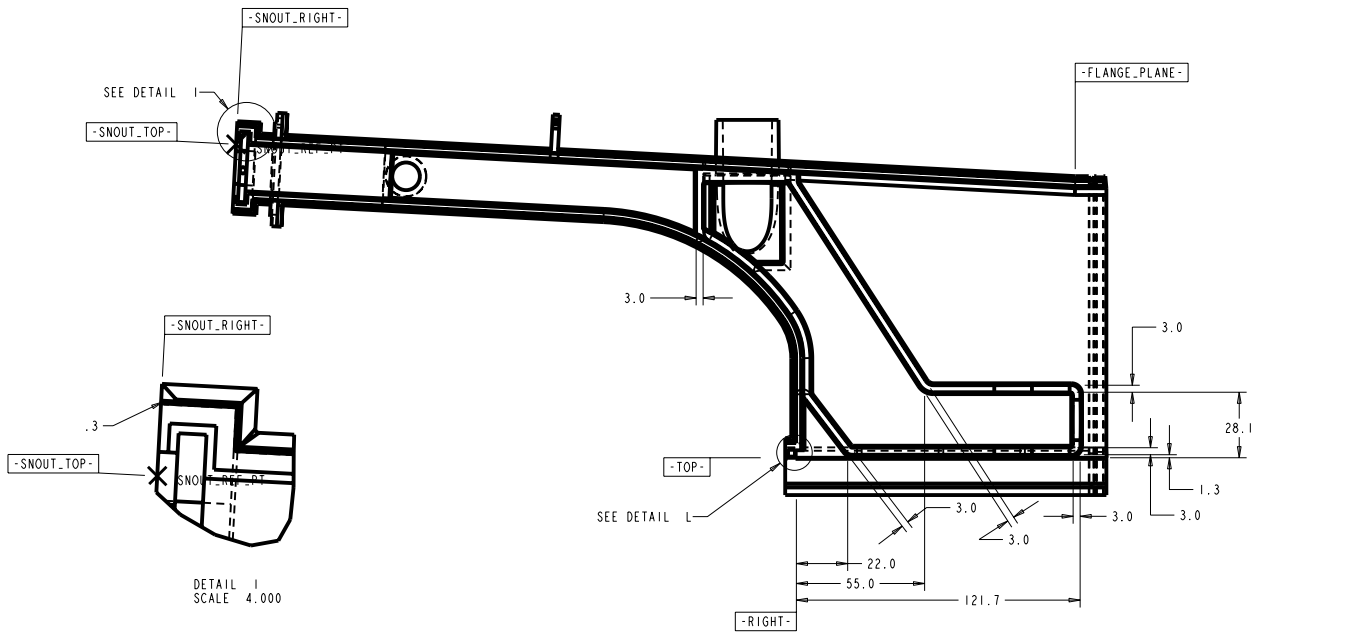

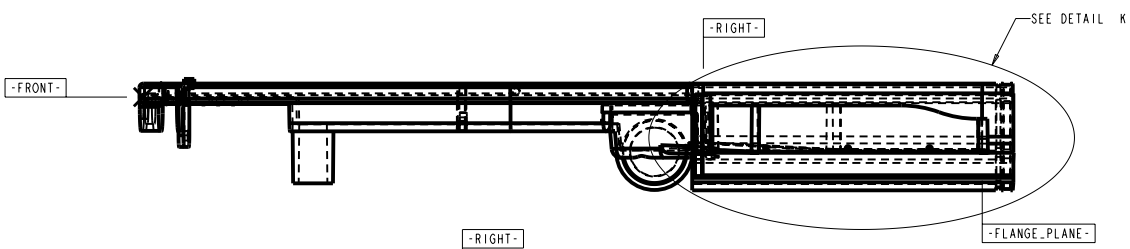

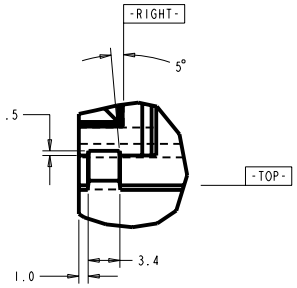

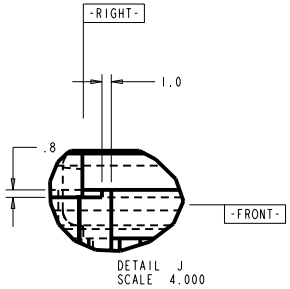

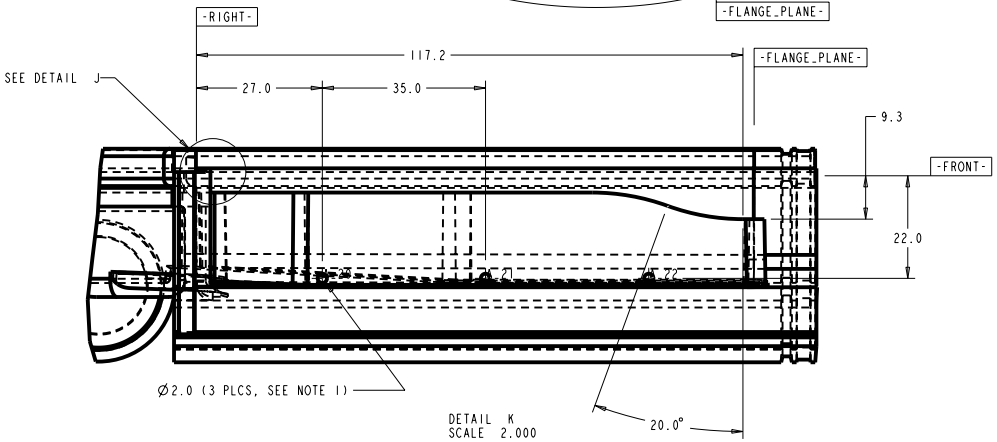

NOTES	
1	2.0 MM HOLES MAY BE EITHER DRILLED OR MOLDED

TOLERANCES		ORIGINATOR	T. Chase	05-Jun-09
.X	±0.1	DRAWN BY	T. Chase	05-Jun-09
.XX	±0.01	CHECKED		
.XXX	±0.001	APPROVED		
ANGLES	±0.5	USED ON: IPND Modules		

NOvA Experiment (Fermilab E929)

University of Minnesota

IPND Snout, Front

Model Type: PART	Model File Name: IPND_SNOUT_FRONT	Drawing File Name: IPND_SNOUT_FRONT
Scale 1.000:1	Drawing Number	Revision / Sheet 5 of 8

Finish

All dimensions are in mm unless specified otherwise