REV	DESCRIPTION	DATE

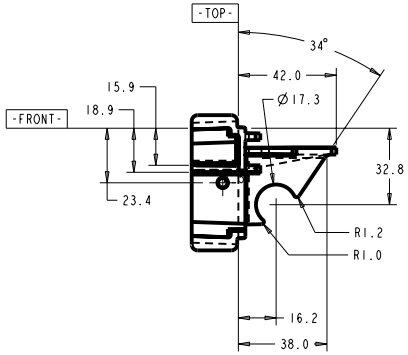

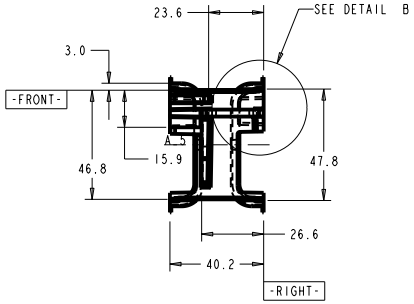

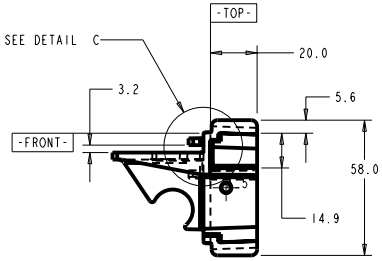

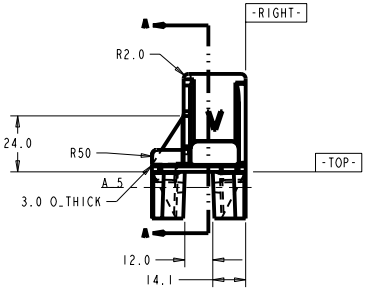

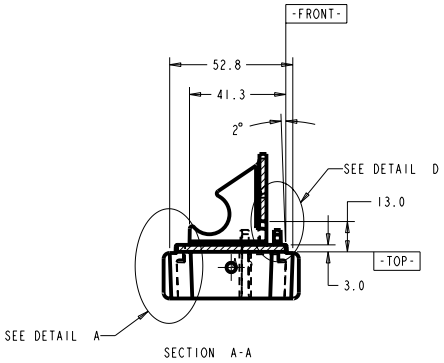

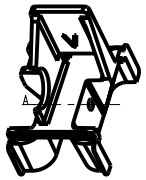

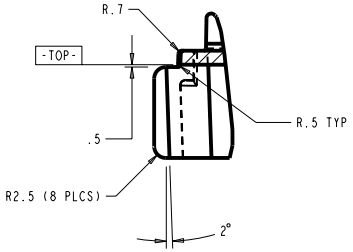

DETAIL A
SCALE 2.000

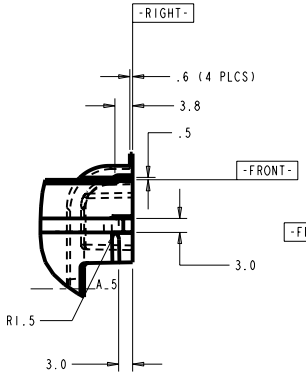

DETAIL B
SCALE 2.000

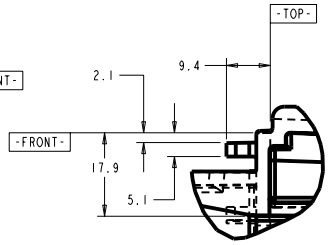

DETAIL C
SCALE 2.000

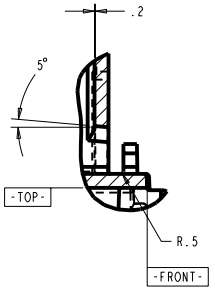

DETAIL D
SCALE 2.000

NOTES	
1	MATERIAL: TYPE I RIGID PVC, GEON M3800, BLACK
2	DO NOT USE MOLD RELEASE
3	MATERIAL REGRIND NOT TO EXCEED SUPPLIER RECOMMENDATIONS
4	PART VOLUME: 18.2 CC (1.11 IN^3)
5	QUANTITIES: 500 (PROTOTYPING); 7,000 (PRODUCTION)

TOLERANCES		ORIGINATOR	T. Chase	08-Sep-06
.X	±0.1	DRAWN BY	T. Chase	08-Sep-06
.XX	±0.01	CHECKED		
.XXX	±0.001	APPROVED		
ANGLES	±0.5	USED ON: NOvA Manifold Assembly		

NOvA Experiment (Fermilab E929)

University of Minnesota

Manifold Center Seal, Top, Vertical

Model Type:	Model File Name:	Drawing File Name:
PART	MANIF_CTR_SEAL_VERT_TOP	MANIF_CTR_SEAL_VERT_TOP
Scale: 1.000:1	Drawing Number	Revision / Sheet: 1 of 2

Finish

All dimensions are in mm unless specified otherwise