REV	DESCRIPTION	DATE

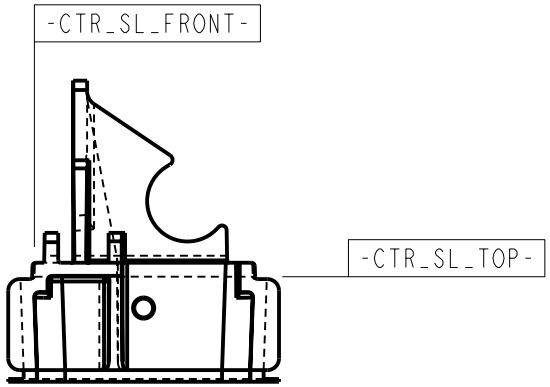

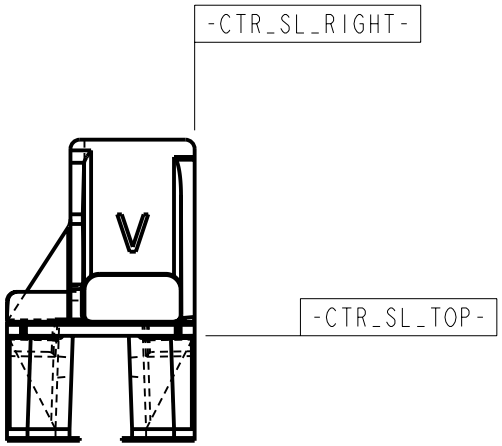

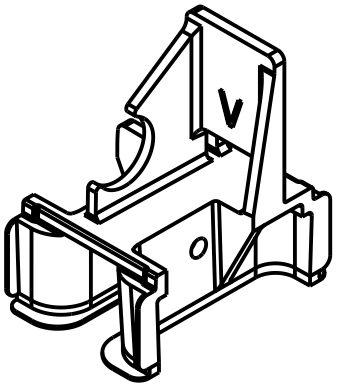

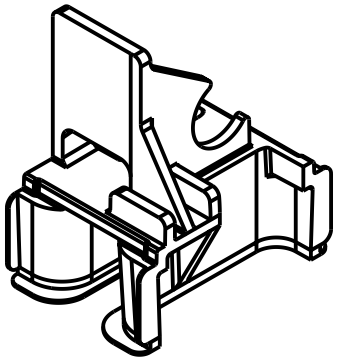

BILL OF MATERIALS

INDEX	COMPONENT NAME	TYPE	QTY	NOTES
1	CENTER_SEAL_VERT_BOT	PART	2	
2	MANIF_CTR_SEAL_VERT_TOP	PART	1	

NOTES

1	ULTRASONICALLY WELD 2-CENTER SEAL, BOTTOMS TO BOTTOM OF MANIFOLD CENTER SEAL, TOP
2	QUANTITY: 500 (PROTOTYPING), 7,000 (PRODUCTION)

TOLERANCES		ORIGINATOR	T. Chase	06-Aug-07
.X	±0.1	DRAWN BY	T. Chase	06-Aug-07
.XX	±0.01	CHECKED		
.XXX	±0.001	APPROVED		
Angles	±0.5	USED ON: NOvA module manifolds		

NOvA Experiment (Fermilab E929)

UNIVERSITY OF MINNESOTA

Manifold Center Seal Assembly, Vertical

Finish	Model Type: ASSEM	Model File Name: MANIF_CTR_SEAL_VERT	Drawing File Name: MANIF_CTR_SEAL_VERT	
	Scale 1.000:1	Drawing Number	Revision	Sheet 1 of 1
	All dimensions are in mm unless specified otherwise			