| REV | DESCRIPTION | DATE |
|---|---|---|

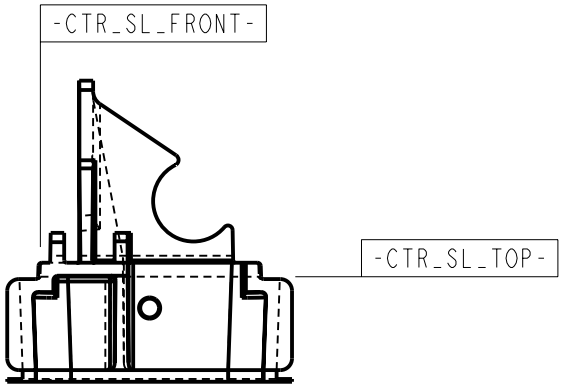


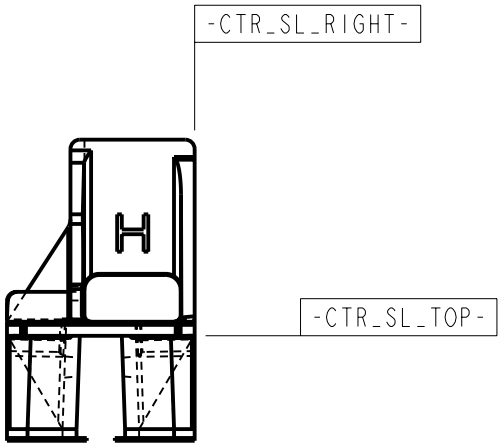


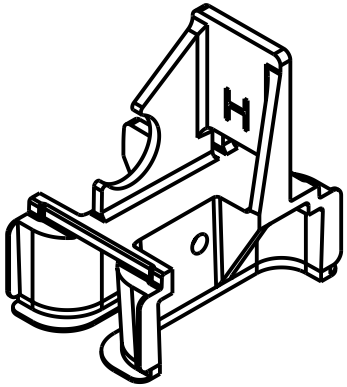

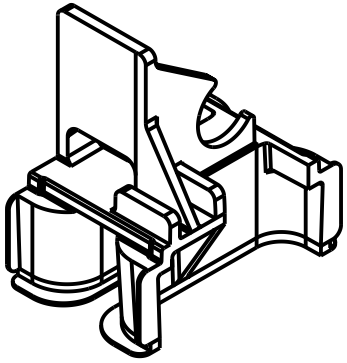

BILL OF MATERIALS

| INDEX | COMPONENT NAME | TYPE | QTY | NOTES |
|---|---|---|---|---|
| 1 | CENTER_SEAL_HORIZ_BOT | PART | 2 | |
| 2 | MANIF_CTR_SEAL_HORIZ_TOP | PART | 1 | |

| TOLERANCES | | ORIGINATOR | T. Chase | 06-Aug-07 |
|---|---|---|---|---|
| .X | ±0.1 | DRAWN BY | T. Chase | 06-Aug-07 |
| .XX | ±0.01 | CHECKED | | |
| .XXX | ±0.001 | APPROVED | | |
| Angles | ±0.5 | USED ON: NOvA module manifolds | | |

**NOvA Experiment (Fermilab E929)**

UNIVERSITY OF MINNESOTA

**Manifold Center Seal Assembly, Horizontal**

| Finish | Model Type: ASSEM | Model File Name: MANIF_CTR_SEAL_HORIZ | Drawing File Name: MANIF_CTR_SEAL_HORIZ | |
|---|---|---|---|---|
| | Scale 1.000:1 | Drawing Number | Revision | Sheet 1 of 1 |
| | All dimensions are in mm unless specified otherwise | | | |

NOTES

| | |
|---|---|
| 1 | ULTRASONICALLY WELD 2-CENTER SEAL, BOTTOMS TO BOTTOM OF MANIFOLD CENTER SEAL, TOP |
| 2 | QUANTITY: 500 (PROTOTYPING), 7,000 (PRODUCTION) |