REV	DESCRIPTION	DATE

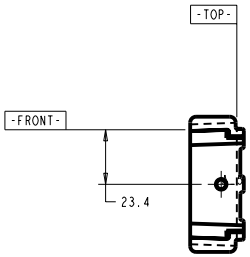

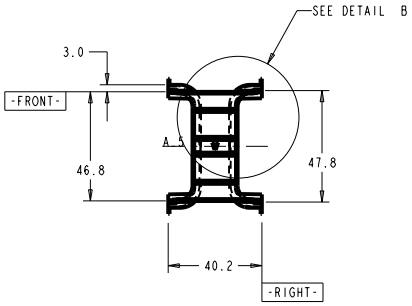

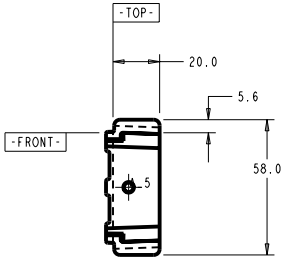

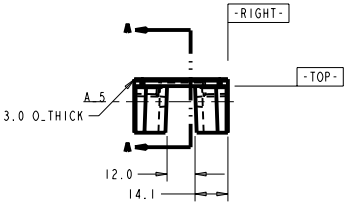

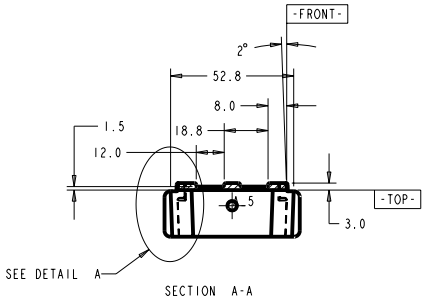

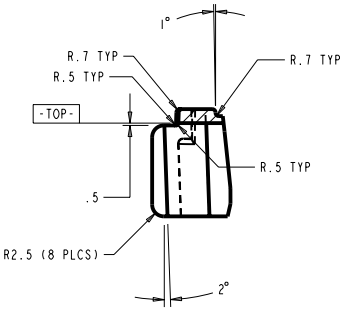

DETAIL A
SCALE 2.000

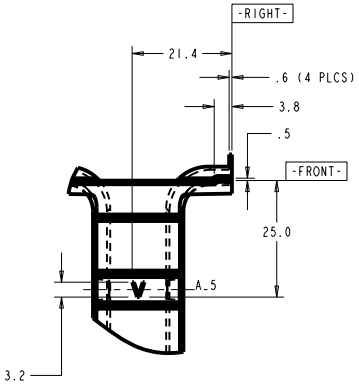

DETAIL B
SCALE 2.000

NOTES	
1	MATERIAL: TYPE I RIGID PVC, GEON M3800, BLACK
2	DO NOT USE MOLD RELEASE
3	MATERIAL REGRIND NOT TO EXCEED SUPPLIER RECOMMENDATIONS
4	PART VOLUME: 19.0 CC (1.16 IN^3)
5	QUANTITIES: 500 (PROTOTYPING); 7,000 (PRODUCTION)

TOLERANCES		ORIGINATOR	T. Chase	08-Sep-06
.X	±0.1	DRAWN BY	T. Chase	08-Sep-06
.XX	±0.01	CHECKED		
.XXX	±0.001	APPROVED		
ANGLES	±0.5	USED ON: NOvA Manifold Assembly		

NOvA Experiment (Fermilab E929)

University of Minnesota

End Plate Center Seal, Top, Vertical

Model Type: PART	Model File Name: CENTER_SEAL_VERT_TOP	Drawing File Name: CENTER_SEAL_VERT_TOP
Scale 1.000:1	Drawing Number	Revision / Sheet 1 of 2
Finish	All dimensions are in mm unless specified otherwise	