Outfitting the Ash River Detector

R.J. Tesarek
NOvA Deputy Project Manager
NOvA DOE Review 8/9/11

Scope

Status of planning for Ash River

- Detector Assembly (P.Lukens' talk)
- Detector Outfitting (this talk)
- Detector Commissioning (brief outline in this talk)

Boundary Conditions:

- Nearly all installation/outfitting done by technicians
- Outfitting keeps up with block assembly
- DAQ ready before first block is installed
- Commissioning done remotely (centered at FNAL)

Preparing for outfitting

- Infrastructure needed in place before outfitting the detector

Near Detector on the Surface (NDOS) experience collected from 6 workshops

- NDOS building/infrastructure similar to setup at Ash River
- Work summarized by 35 individuals
- ~40 nova documents including procedures and experience based estimates
- Resource loaded outfitting schedule for Ash River

Workshops to continue as communication forum ~monthly

Before the 1st Block

Planning continues for some activities

Infrastructure Installation/modification (August-December 2011)

- Special Room Outfitting (Sep.-Oct.)
  - Chemical trailer (scintillator qualification)
  - Control Room
  - "APD Assembly Area"
- Install and qualify scintillator distribution system (Aug-Sep. install, Oct-Dec qualify)
  - Plumbing
  - Scintillator handling (heaters, pumps, reservoirs, controls)
  - Qualification of system cleanliness
- Detector Rack/power supply installation (Goal: Sep.-Dec., currently starts May 2012)
  - Install detector power supplies in racks
  - Install/test detector racks in place
- Detector cooling system (Sep.-Oct.)
  - System design review in next month
  - Install chillers and main supply/return pipes
  - Setup/test chiller controls
- DAQ Installation & testing (Goal: Oct.-Dec.)
  - DAQ computer installation/setup
  - Stress and throughput tests

Specialty Rooms at Ash River

Control Room

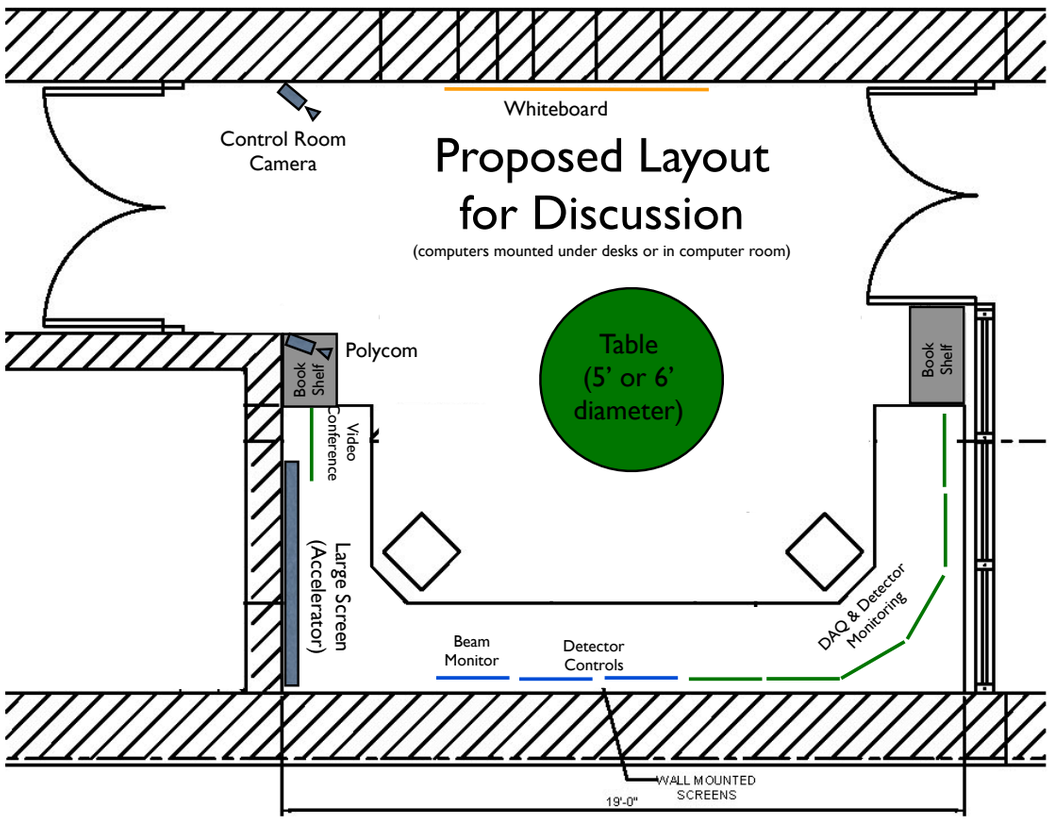

Scintillator QA Trailer

APD Assembly Area (below Control Room)

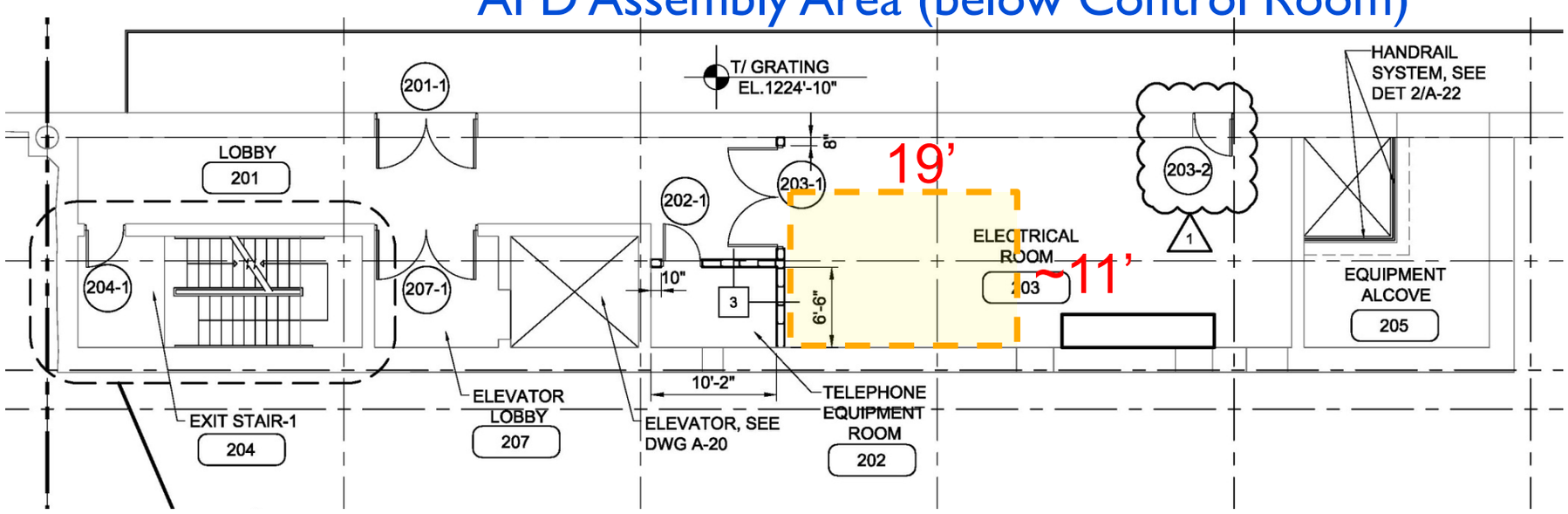

Water Cooling System

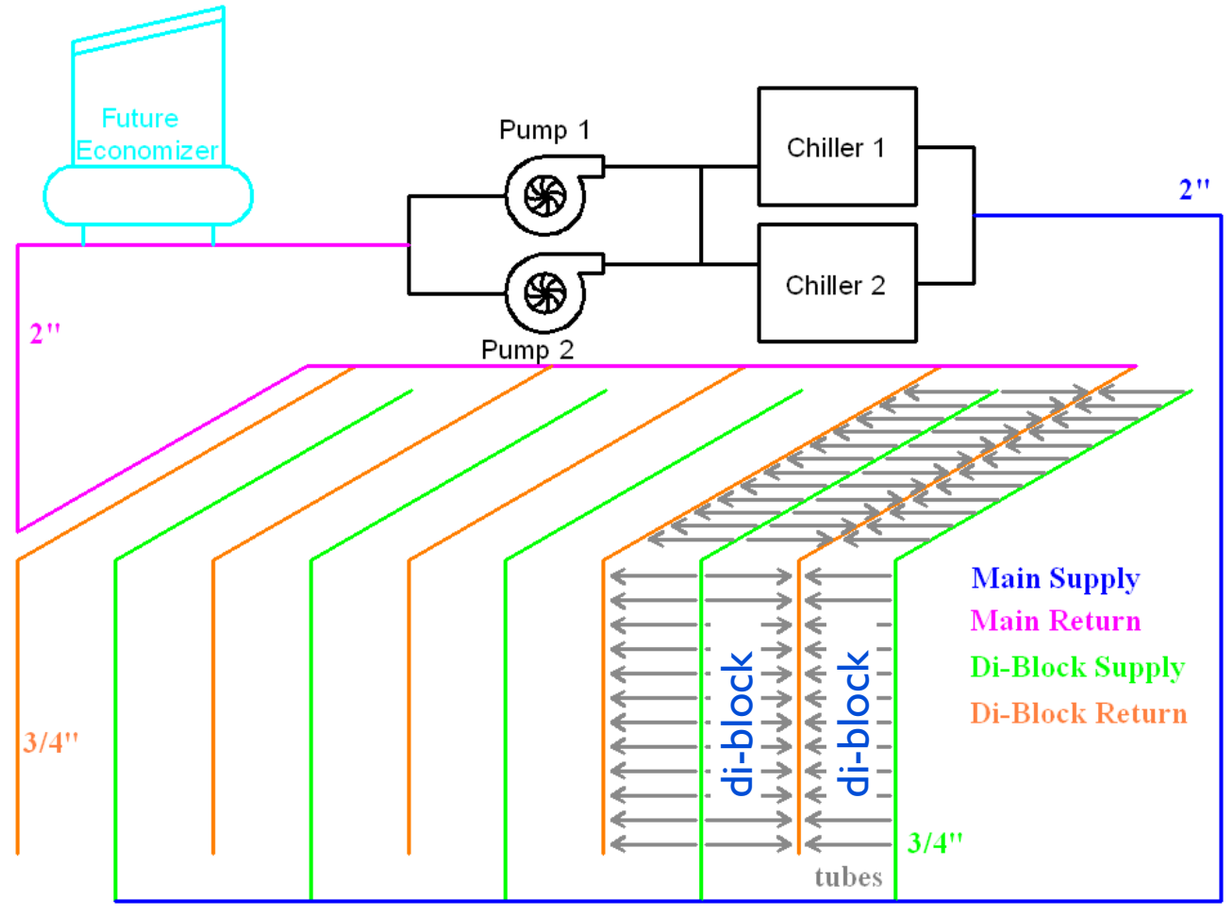

Design improved from NDOS

- 32 heat sinks in series
- removed orifices in heat sink hoses
- fewer supply/return lines/di-block
- 2 chillers (down from 15)
  - + 30% fewer connections
  - + chiller redundancy
  - + fewer obstructions for filling or electronics installation
  - + better expected reliability

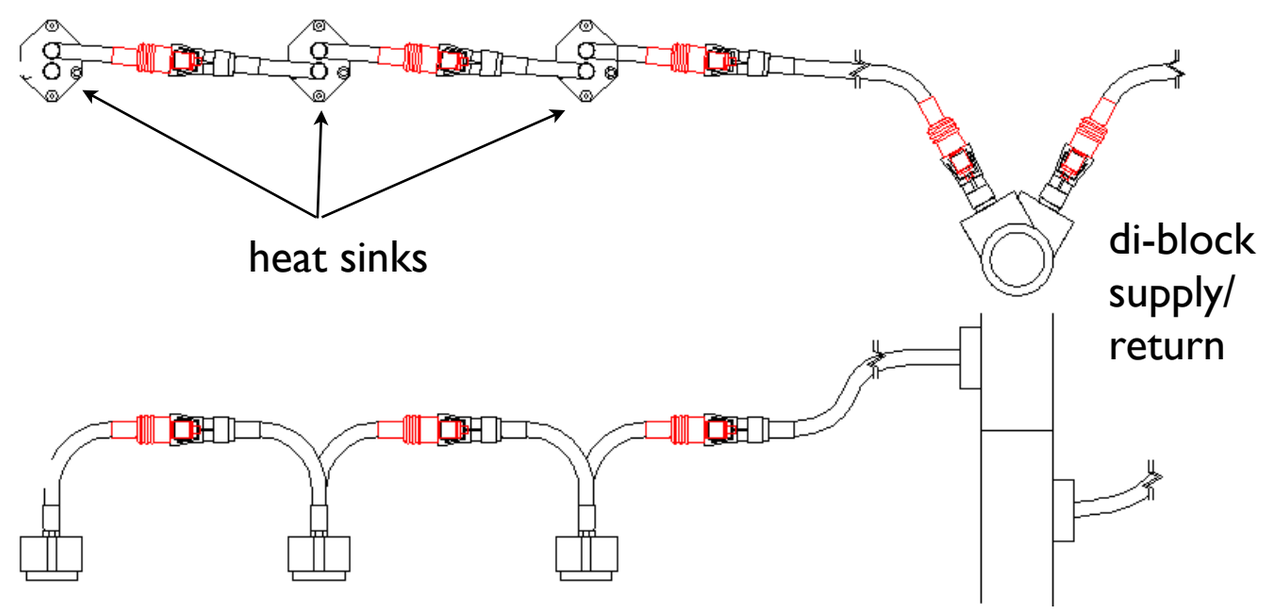

Ash River: Upper Catwalk

Cooling system only needs space for 2 chillers, space available for 4 chillers (expand to 18kT)

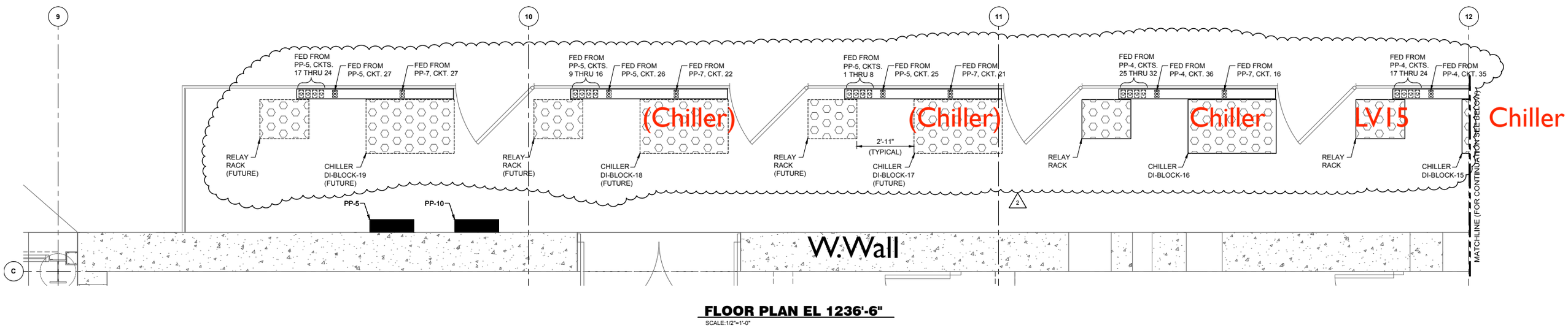

3 sections omitted for clarity

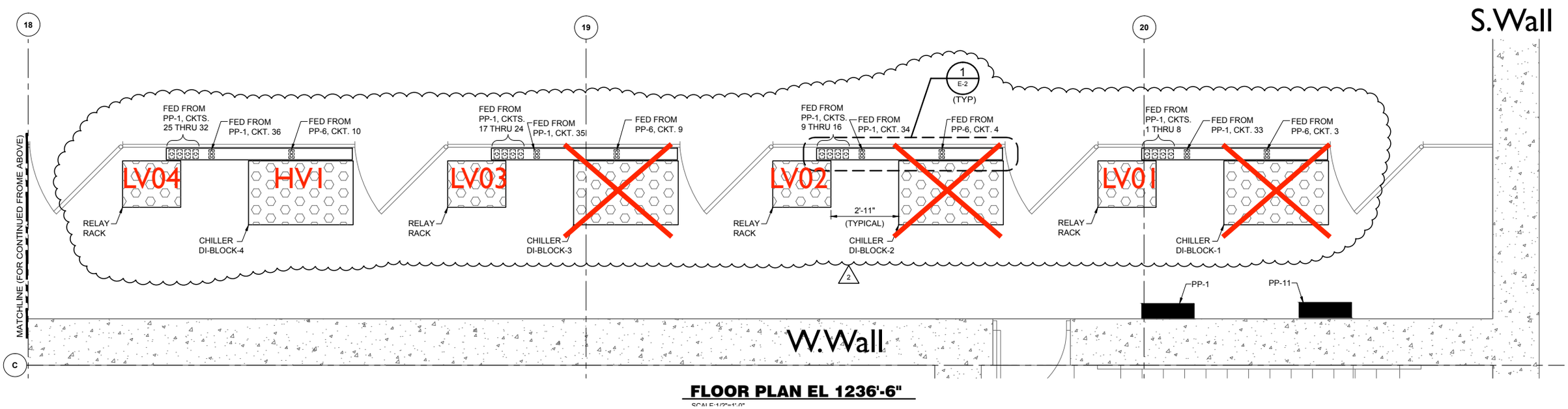

DAQ Upgrade Summary

Instrumentation is for 2 block (di-block)

Operation of ~ 7 di-blocks technically possible with current system

Beyond ~2 di-blocks, require several upgrades to handle complexity

- Parallelization of RunControl DCM startup
- User Interfaces
- Automatic Error Recovery
- RunControl GUE/Server separation
- Partitioning resources (simultaneously commission/operate parts of detector)
- File Transfer System

Planning underway, initial coarse estimates below

System	What	Expected Completion
Run Control:	Server	Mid July
Run Control:	Partitioning	Late September
Run Control:	Parallelization	Mid August
Monitoring:	Remote Monitoring	Early August
File Transfer:	File Transfer	Mid July
Many	User Interfaces	Early November
Many	Auto Error Recovery	November
Many	Testing	September

Near Detector on the Surface (NDOS)

Near Detector Top

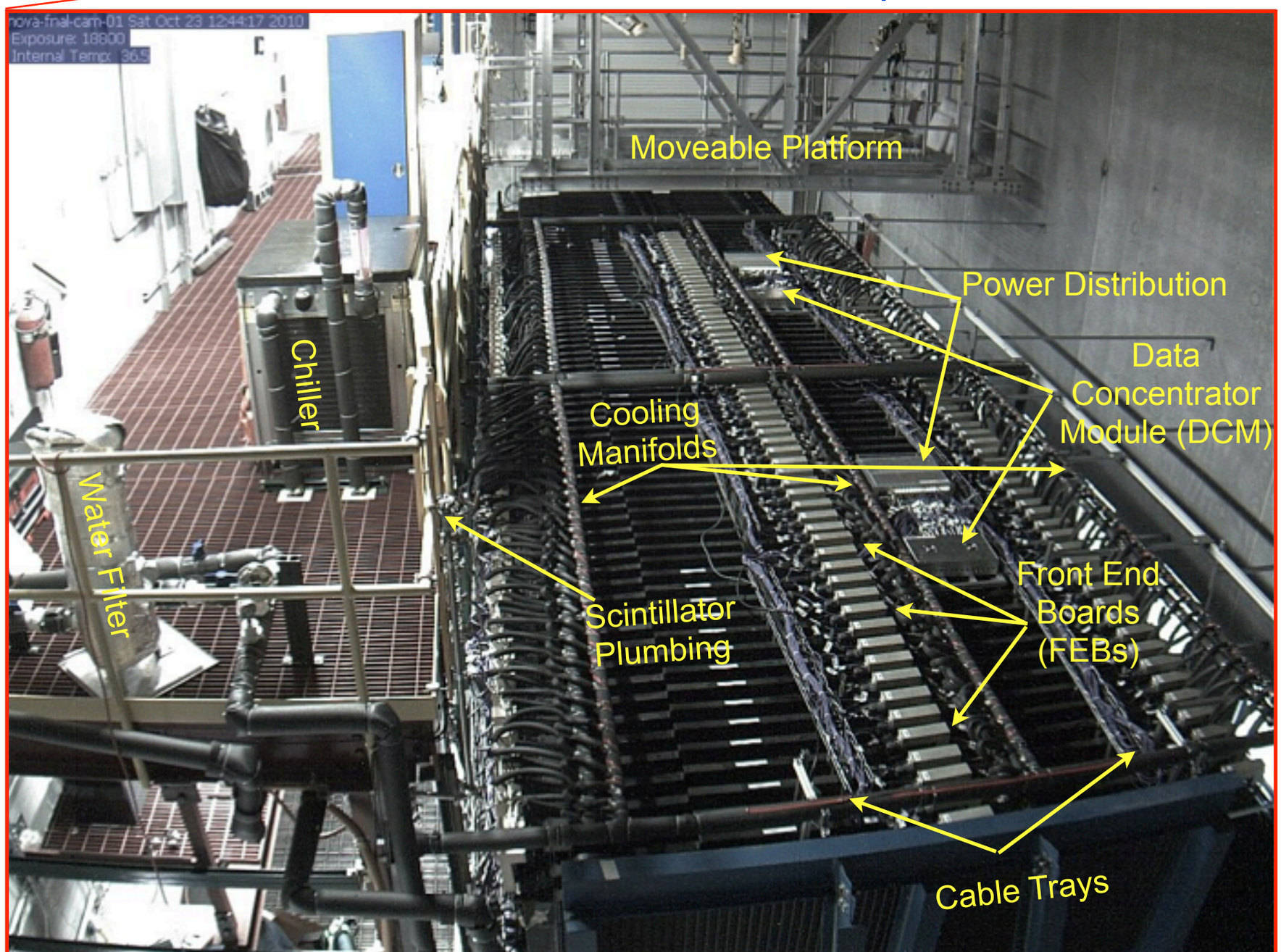

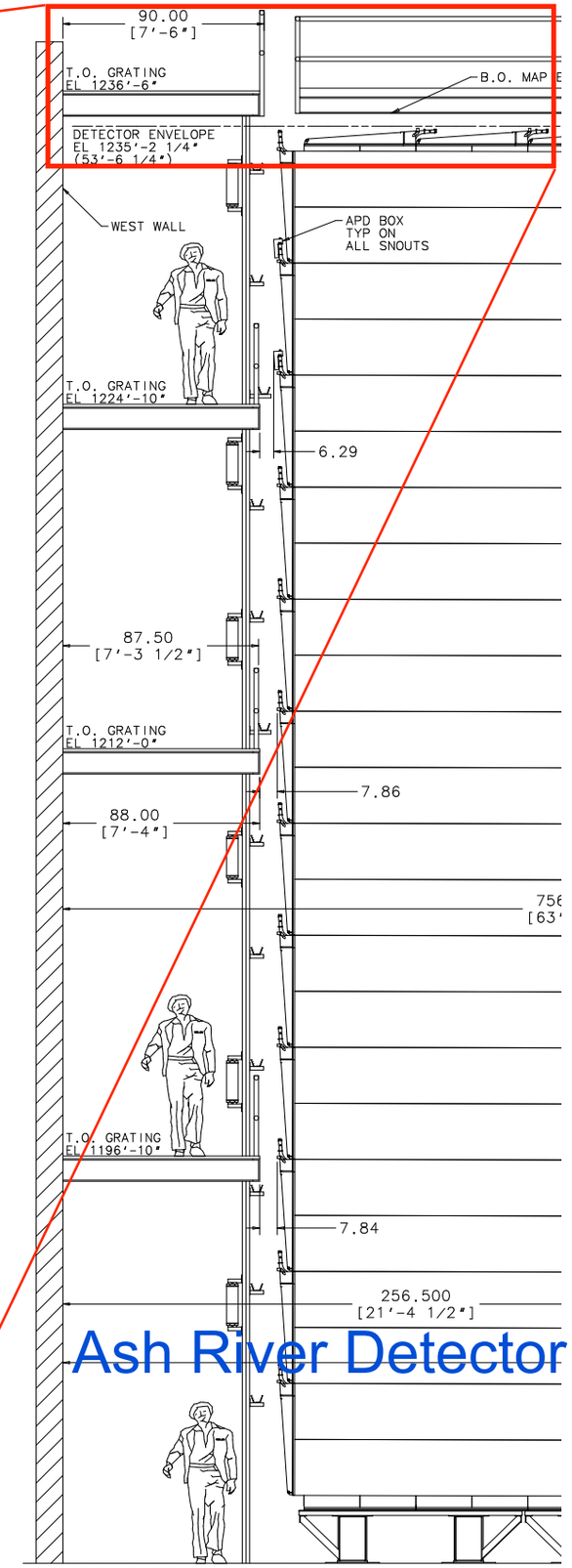

Near Detector on the Surface (NDOS)

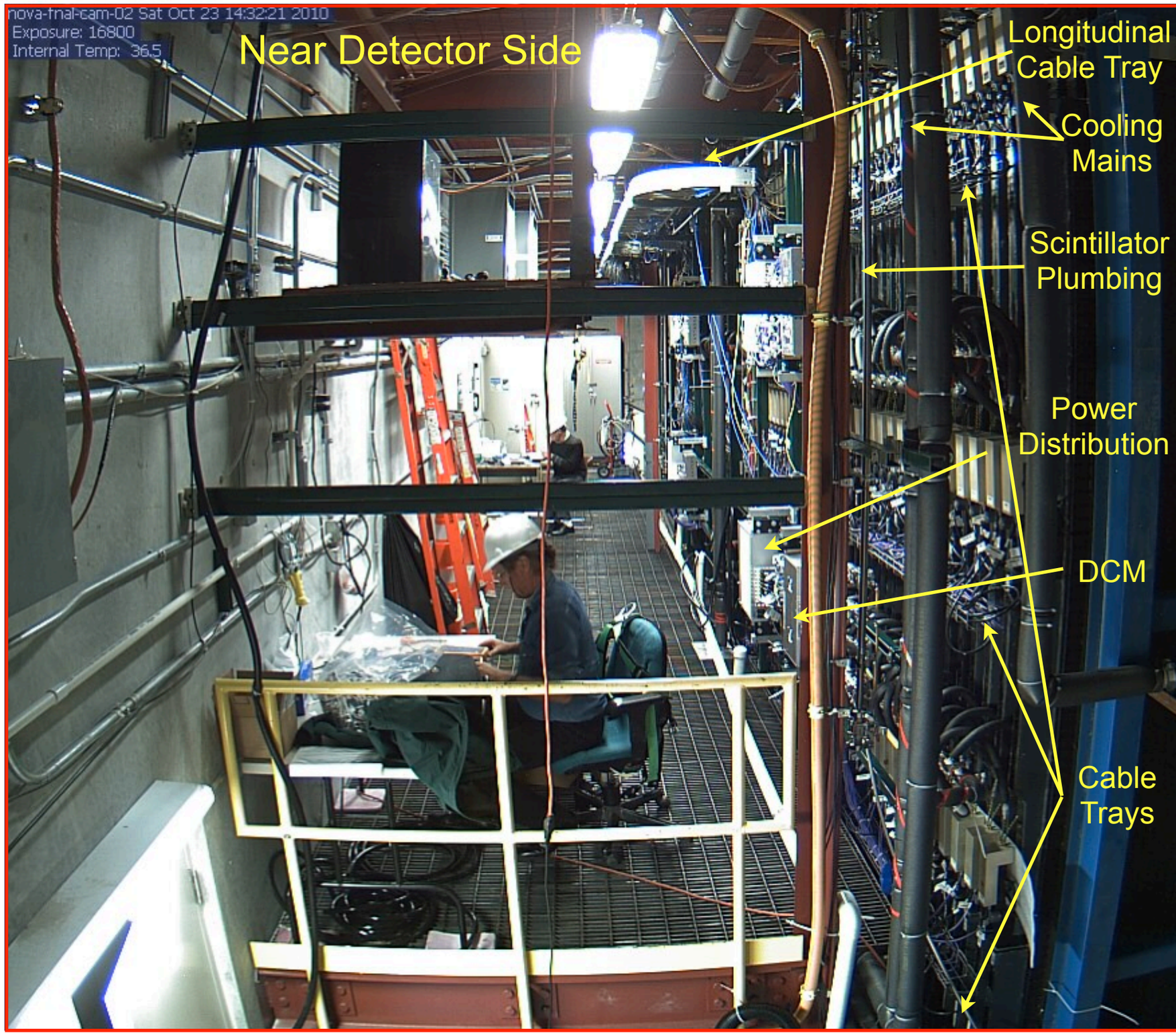

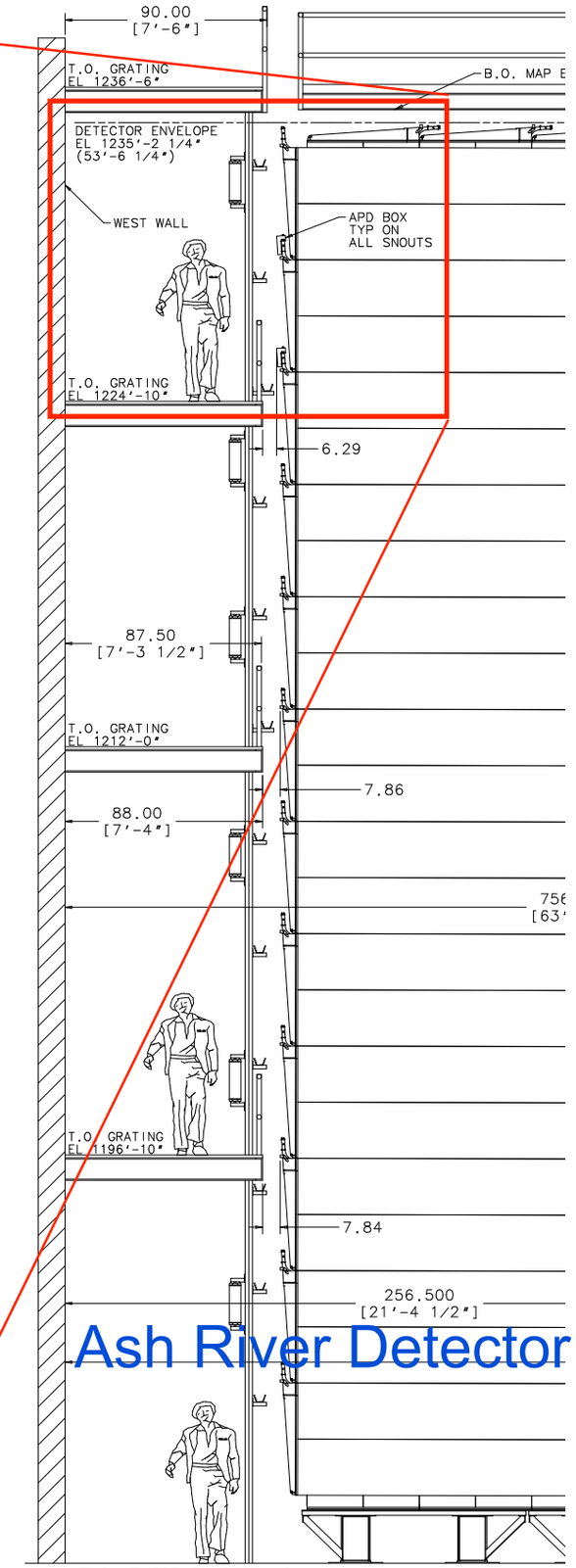

Ash River Detector Hall

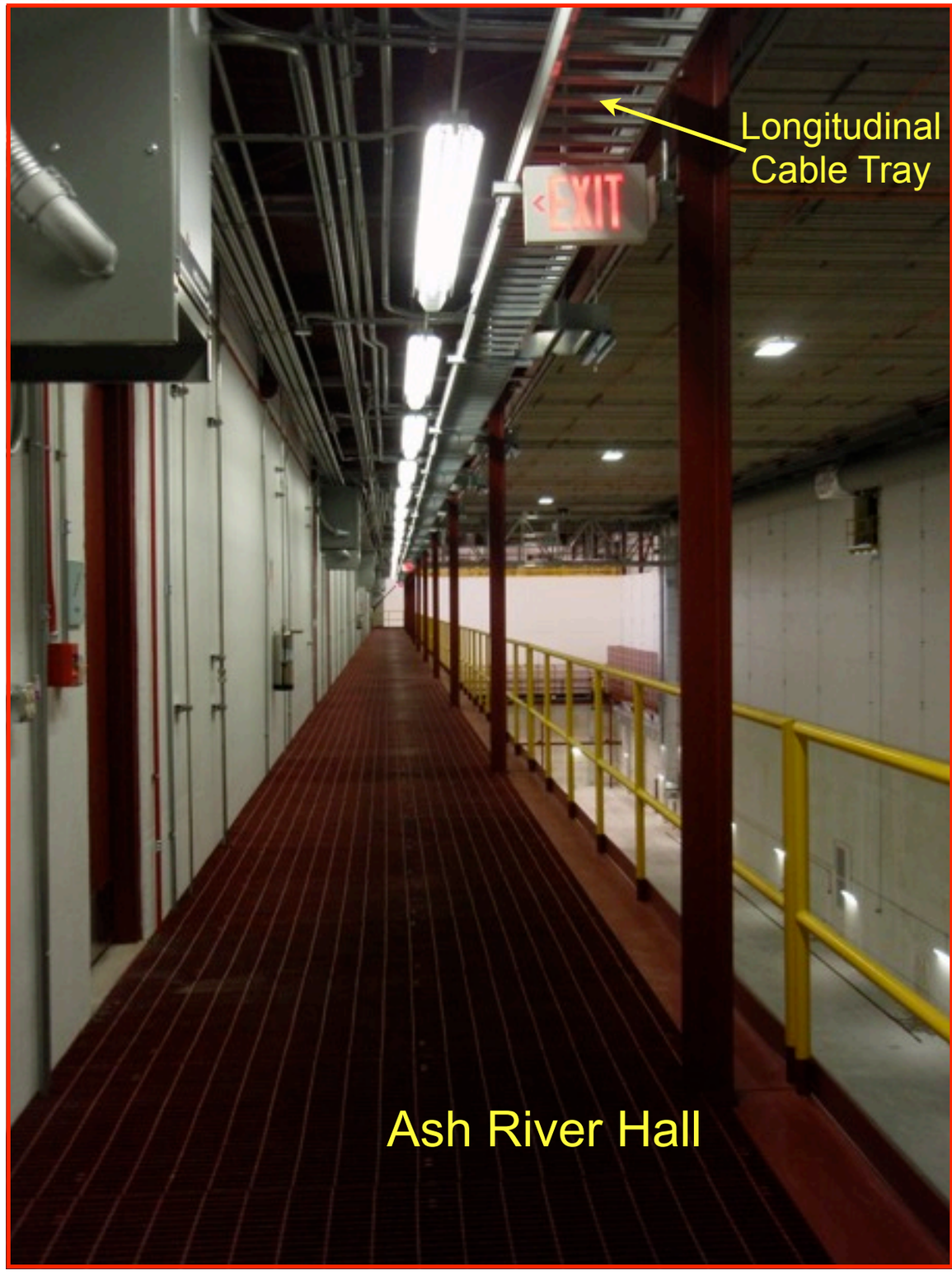

NOTES:

- NDOS only modeled one catwalk
- Each catwalk is unique
- Some challenges in specific locations

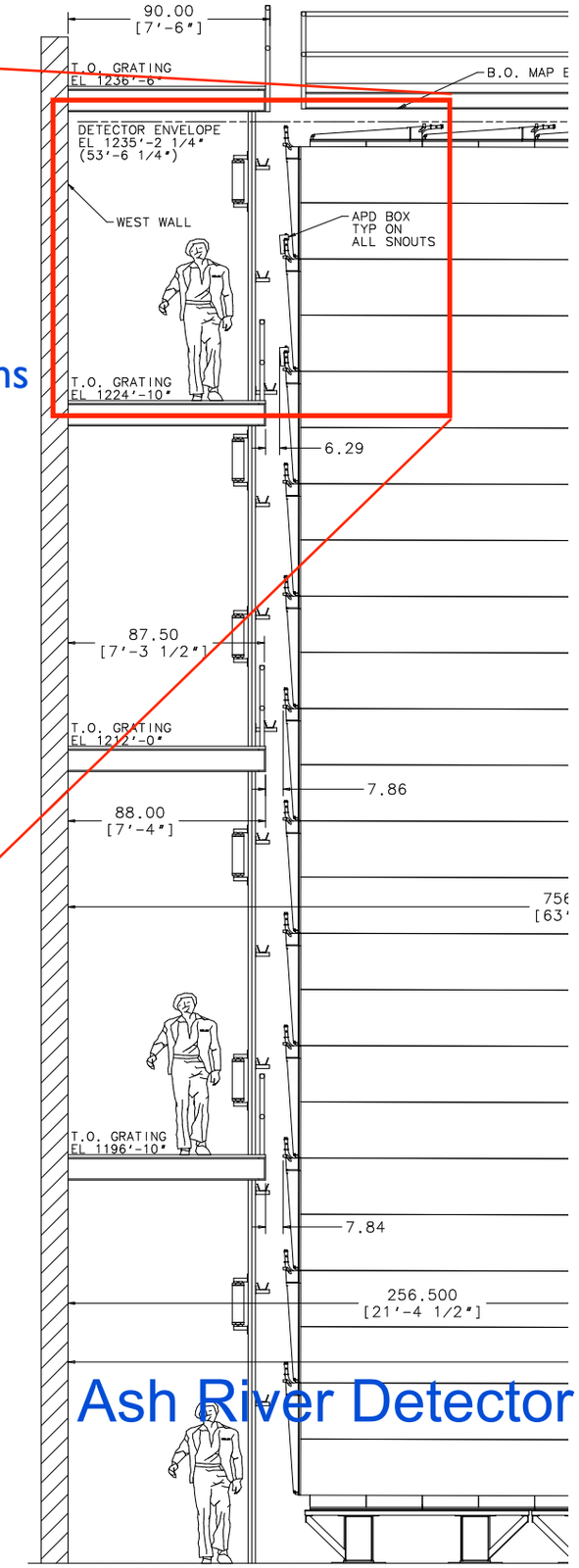

Near Detector Experience Summary

Item #	Task name	Author	DocDB Ref #	Page	Work shop	Work Site	Labor Type	# of Workers	Time Required (Hours)	Units	Multiplier (per Diblock or other unit)	Total Task Duration (Hours)	Total Labor Required (Hours)
1	Terminate 2 LV cable pairs w/ring terminals	Ehrlich, R.	5463-v1	36	I	Ash River	Outfitting Crew	2	0.5	Pair	12	6	12
2	Cut/terminate 4 short LV cables (PS-Breaker)	Ehrlich, R.	5463-v1	36	I	Ash River	Outfitting Crew	2	0.66	Set		0	0
3	Install stands, cable trays and table (detector	Ehrlich, R.	5463-v3	11	II	Ash River	Outfitting Crew	2	0.66	Set	6	4	8
4	Mount 1 DCM or PDB on side/top of detector	Ehrlich, R.	5463-v3	13	II	Ash River	Outfitting Crew	2	0.5	DCM or	12	3	6
5	Mount cable trays on side of detector	Ehrlich, R.	5463-v3	18	II	Ash River	Outfitting Crew	1	1	PDB	6	6	6
6	Mount vertical cable trays on side of detector	Ehrlich, R.	5463-v3	20	II	Ash River	Outfitting Crew	1	0.5	Tray	6	3	3
7	Install "Main" ground strips	Ehrlich, R.	5463-v3	24	II	Ash River	Outfitting Crew	2	0.5	Diblock	1	1	1
8	Install "Side" ground strips	Ehrlich, R.	5463-v3	26	II	Ash River	Outfitting Crew	1	0.5	Section	6	3	3
9	Install ground strips on top of detector	Ehrlich, R.	5463-v3	29	II	Ash River	Outfitting Crew	2	1	Section	6	6	12
10	Install LV & sense main power cables	Ehrlich, R.	5463-v3	37	II	Ash River	Outfitting Crew	2	0.75	PDB	12	9	18
11	Install HV cables	Ehrlich, R.	5463-v3	44	II	Ash River	Outfitting Crew	2	0.25	Cable	12	3	6
12	Install FEB's	Vahle, P.	5677	4	III	Ash River	APD Techs	2	0.05	FEB	768	19	38
13	Prepare & install APD's	Muether, M.	5883	567	IV	Ash River	APD Techs	2	0.3	APD	768	230	461
14	Run DCM/FEB test (S.Kasahara - #5657)	Perevalov, D.	5886	10	IV	Ash River	APD Techs	1	1.5	60 FEB's	13	20	20
15	Run DSO scan & threshold analysis	Perevalov, D.	5886	7	IV	Ash River	APD Techs	1	0.33	DCM	13	4	4
16	Develop/manage the QA database at AR	Gebhard, M.	5484	3	I	Ash River						0	0
17	Fill modules with oil	Gebhard, M.	5667	8	III	Ash River	Scint Crew	2	0.5	Module	786	393	786
18	Paint sides of FD modules black	Kephart, K.	5455	4	I	Ash River	Mech Techs	3	Unknown		2	#VALUE!	#VALUE!
19	Paint flat faces of FD modules black	Kephart, K.	5455	5	I	Ash River	Mech Techs	1	Unknown		2	#VALUE!	#VALUE!
20	Place FD monuments & connect to NuMI	Miao, T.	5529	3	II	Ash River	Survey Crew?	3	80		1	80	240
21	Survey south bookend	Miao, T.	5529	3	II	Ash River	Survey Crew	3	8	Hall	1	8	24
22	Survey floors & walls and mark plumb lines	Miao, T.	5529	5	II	Ash River	Survey Crew	3	8	Hall	1	8	24
23	Survey floor 2nd time	Miao, T.	5529	5	II	Ash River	Survey Crew	3	Not stated		1	#VALUE!	#VALUE!
24	Measure pivoter table flatness (3 times?)	Miao, T.	5529	6	II	Ash River	Survey Crew	3	4	Table	3	12	36
25	Scan each 12 module plane	Miao, T.	5529	8	II	Ash River	Outfitting Crew	2	1	Plane	64	64	128
26	Install force sensors & cabling	Miao, T.	5529	15	II	Ash River	Assembly Crew	2	Not stated		2	#VALUE!	#VALUE!
27	Calibrate & test distance sensor readouts	Miao, T.	5460	15	I	Ash River	Physicists	Not stated	Not stated			#VALUE!	#VALUE!
28	Install/align distance sensors & cables	Miao, T.	5529	15	II	Ash River	Assembly Crew	2	Not stated		2	#VALUE!	#VALUE!
29	Prepare surface and install strain gauges	Miao, T.	5529	15	II	Ash River	Assembly Crew	2	Not stated		2	#VALUE!	#VALUE!
30	Install laser or plumb bob device	Miao, T.	5529	15	II	Ash River	Assembly Crew	2	Not stated			#VALUE!	#VALUE!
31	Readout board connection & LabVIEW tests	Miao, T.	5529	15	II	Ash River	Elec Techs	Not stated	Not stated			#VALUE!	#VALUE!
32	Readout and slow control tasks	Miao, T.	5529	15	II	Ash River	Physicists	Not stated	Not stated			#VALUE!	#VALUE!
33	Pressure test FD block (ND block extrapolation)	Muether, M.	5456	11	I	Ash River	Outfitting Crew	2	16	Block	9.6	154	307
34	Label/Bundle/Install data cables (DCM-FEB)	Muether, M.	5456	16	I	Ash River	Not stated	2	2	Bundle	48	96	192
35	Sample/Check piping cleanliness	Mufson, S.	5458	3	I	Ash River	Chem Tech	1	0.75	Sample	278	209	209
36	Sample scintillator from tanker	Mufson, S.	5458	4	I	Ash River	Chem Tech	1	0.75	Sample/	483	362	362
37	Install computing relay racks	Norman, A.	5525	4	II	Ash River	Elec Techs	2	24	Install	1	24	48
38	Install detector relay racks	Norman, A.	5525	4	II	Ash River	Elec Techs	1	144	Install	1	144	144
39	Install fiber interconnects	Norman, A.	5525	4	II	Ash River	Elec Techs	1	8	Install	1	8	8
40	Install copper interconnects	Norman, A.	5525	4	II	Ash River	Elec Techs	2	144	Install	1	144	288
41	Install copper timing lines	Norman, A.	5525	4	II	Ash River	Elec Techs	1	144	Install	1	144	144
42	Install Timing Distribution Units	Norman, A.	5525	6	II	Ash River	Elec Techs	1	0.33	TDU	1	0	0
43	Install RTD's	Johnson, C.	5887	23	IV	Ash River	APD Techs	2	1	RTD	100	100	200

Outfitting Schedule

Assumptions:

- Steady state outfitting
- Realistic task times from workshops (when available)
- 2 10 hour shifts working 4 days per week
- Outfitting keeps up with block production (3 weeks/block)
- First di-block takes 1.5x longer than steady state outfitting

Includes commissioning (5% failures)

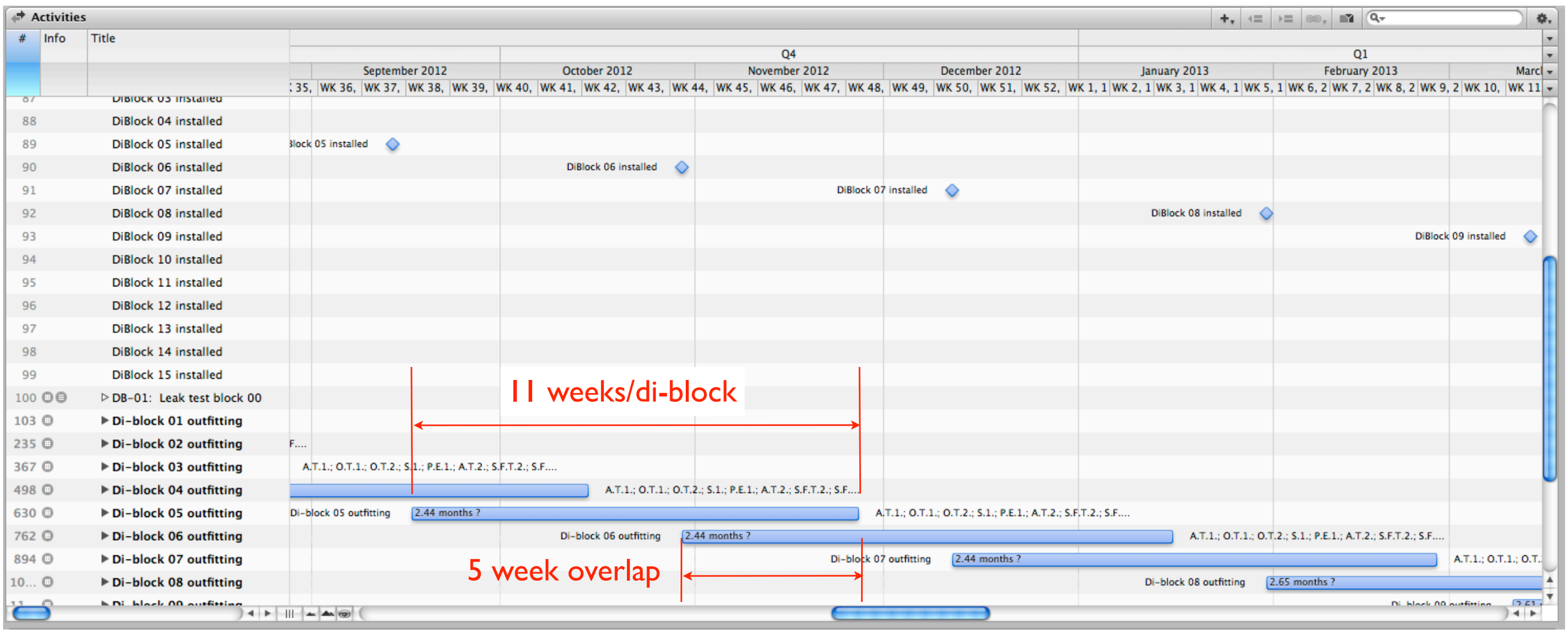

DiBlock Outfitting Detail

Block Assembly

- 13 days/block

di-Block Outfitting

- 49 tasks/di-block
- 24 days filling/di-block
- 23 days outfitting/di-block
- 25 days APD installation & commissioning

Color Code:

- (Blue)Documented task durations
- (yellow)Documented task durations, but opportunity to advance schedule using external effort
- (Red)Semi-documented task durations and guesses based on near detector outfitting

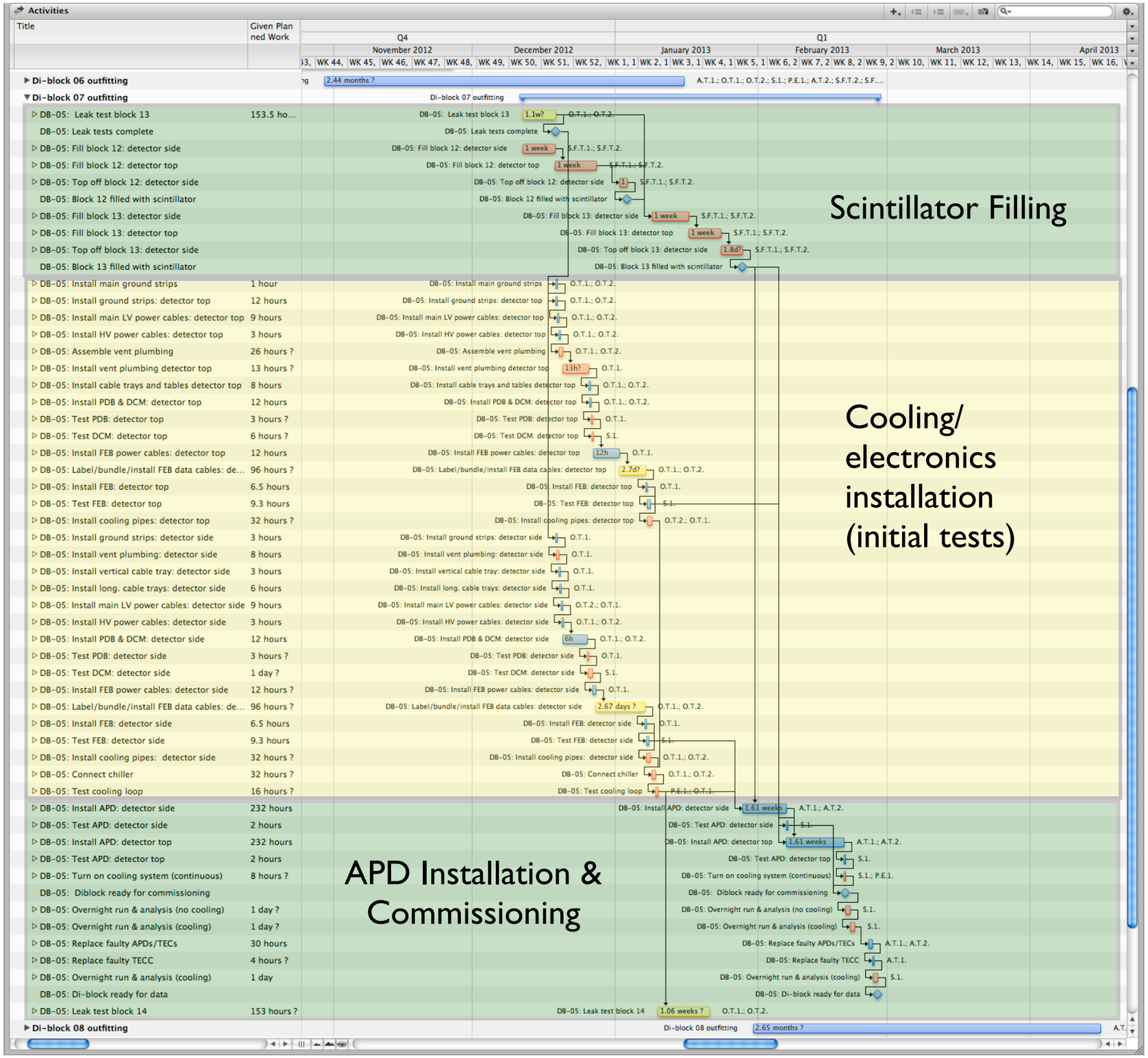

Outfitting Personnel

Personnel Needs/shift:

- 2 scintillator filling techs (81% average utilization)
- 2 outfitting techs (86% average utilization)
- 2 APD techs (62% average utilization)
- < 1 scientist (~30% average utilization)

Some extra personnel available during stages of block assembly

Commissioning personnel partially included in resources (Ash River).

Utilization Color Code (by week)

- Green 25-100%
- Yellow < 25%
- Red > 100%

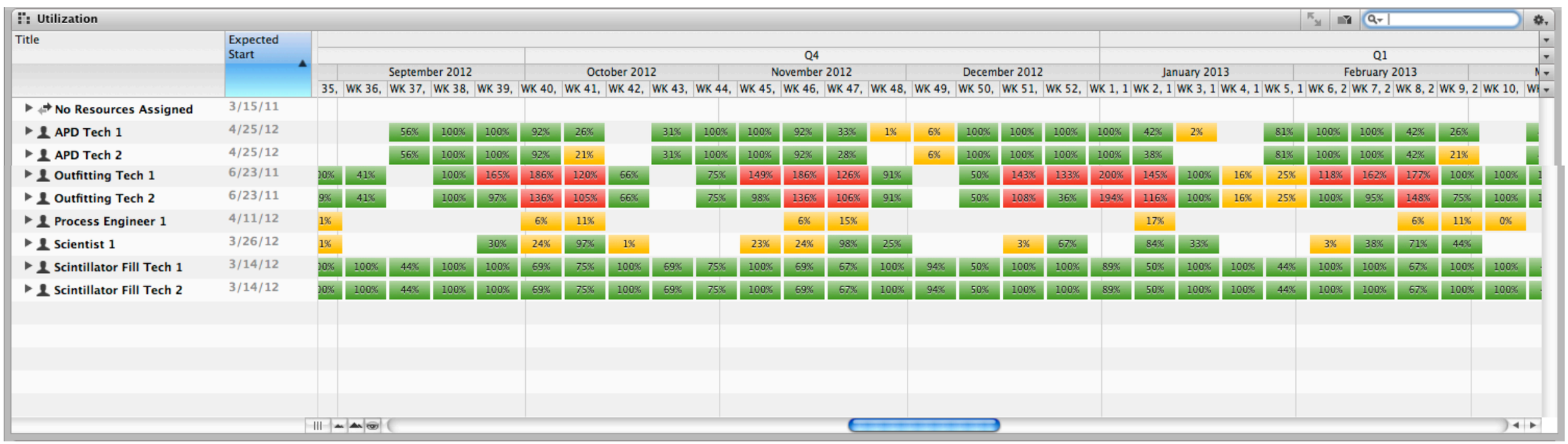

Procedures for Ash River

Still consolidating documentation.

Procedure	Author	DocDB	Comments
PDS Installation	R.Ehrlich	5675	
PDS Checkout	R.Ehrlich	5601	Updated 4/15/11
PDS Operating Manual	R.Ehrlich	5347	
Fill Machine Test	J.Musser	5276	
Scint. Light Transmission	L.Corwin	5263	"Needs updating" (S.Mufson)
Manifold Cover Repair	M.Muether	5139	Addendum to cover filled modules
Module Leak Testing (FNAL)	E.Voirin	5109	
Scintillator Filling	M.Gebhard, J.Musser	5783	Updated 4/5/11
NDOS Horizontal Module Filling	K.Kephart	6130	
NDOS Water System Repair	M.Zuckerbrot	5465	
NDOS Water System Testing	M.Zuckerbrot	5465	
Draining Scint. from NDOS	M.Zuckerbrot	5891	
FEB Cable Bundling	C.Rosenfeld, T.Coan	6101	
FEB data cable tests	M.Muether	5926	Basic info here
DCM installation, checkout	S.Kasahara, D.Perevalov	5657	Needs written installation procedure
FEB/APD Installation & Tests	L.Mualem, M.Muether	4775	Needs updating

Summary

Significant re-planning (fleshing out) of Ash River detector outfitting

Workshops extremely valuable for planning work at Ash River

- Document “lessons learned” from NDOS
- Flesh out plans/needs for Ash River
- Forum for discussion including most stake holders

More workshops to come (next at Ash River, Aug. 23-26)

- Continue to improve plans
- Monitor status of outfitting preparation work
- Forum to communicate status/changes to stake holders
- Planning for near detector underground (NDUG)

Busy and exciting time in front of us