REV	DESCRIPTION	DATE

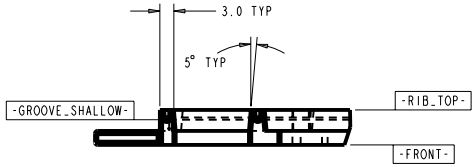

DETAIL A
SCALE 2.000

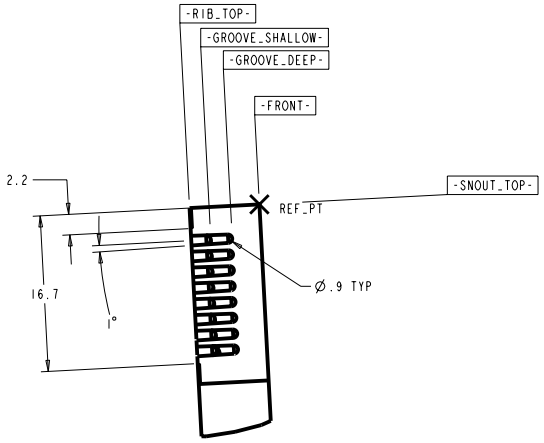

DETAIL B
SCALE 4.000
(HIDDEN LINES SUPPRESSED)

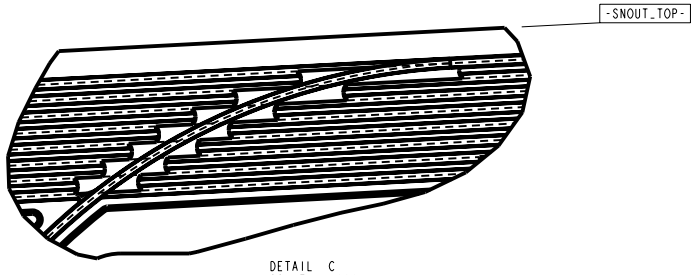

DETAIL C
SCALE 4.000

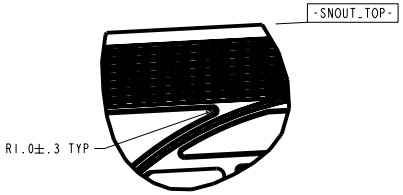

DETAIL D
SCALE 2.000

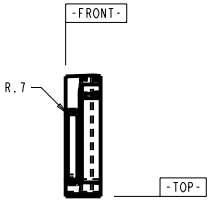

DETAIL E
SCALE 2.000

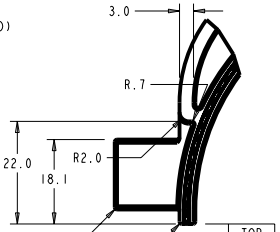

DETAIL F
SCALE 2.000

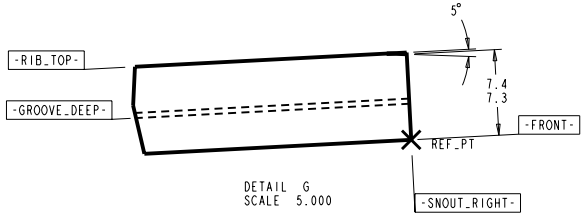

DETAIL G
SCALE 5.000

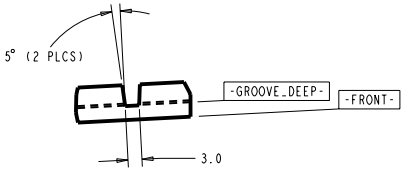

DETAIL H
SCALE 2.000

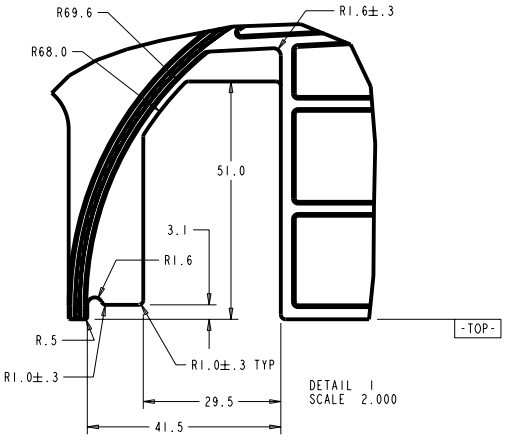

DETAIL I
SCALE 2.000

TOLERANCES		ORIGINATOR	T. Chase	12-Jan-07
.X	±0.1	DRAWN BY	T. Chase	12-Jan-07
.XX	±0.01	CHECKED		
.XXX	±0.001	APPROVED		
ANGLES	±0.5	USED ON: NOvA manifolds		

NOvA Experiment (Fermilab E929)

University of Minnesota

IPND Top Raceway

Model Type:	Model File Name:	Drawing File Name:
PART	IPND_RACEWAY_TOP	IPND_RACEWAY_TOP
Scale: 0.500:1	Drawing Number: UMN-NOVA-3-1002-00	Revision: / Sheet: 3 of 6

Finish

All dimensions are in mm unless specified otherwise