REV	DESCRIPTION	DATE

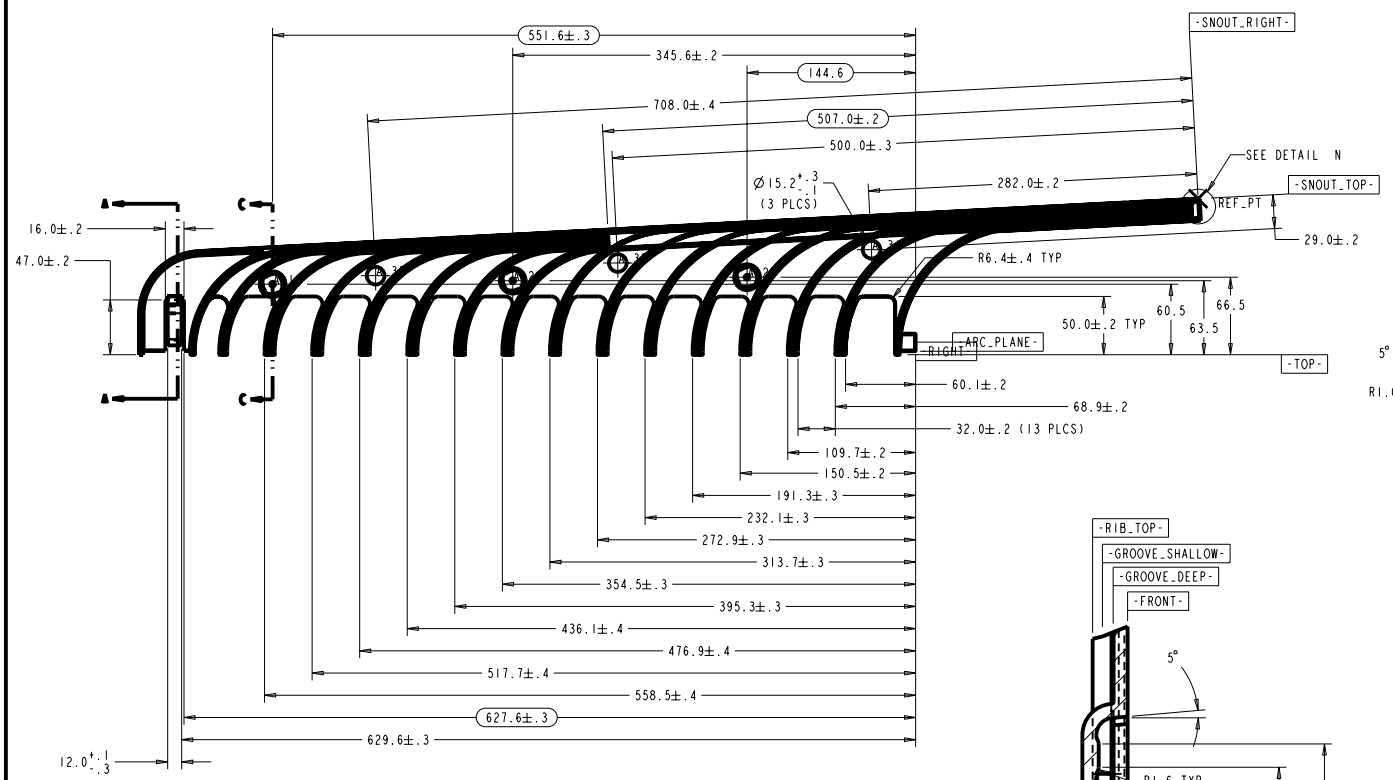

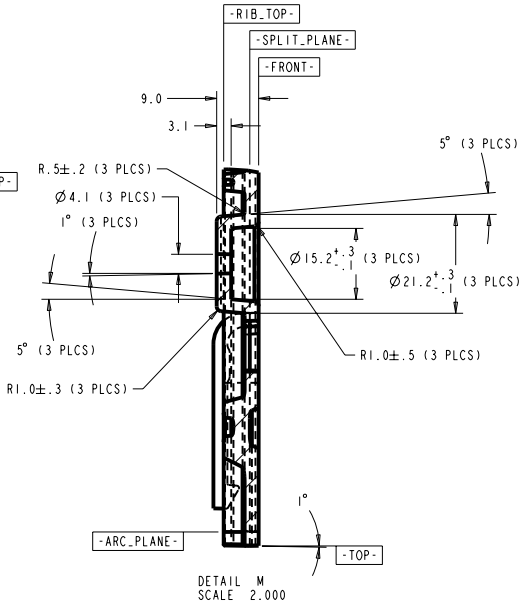

DETAIL M
SCALE 2.000

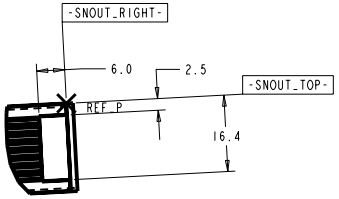

DETAIL N
SCALE 2.000

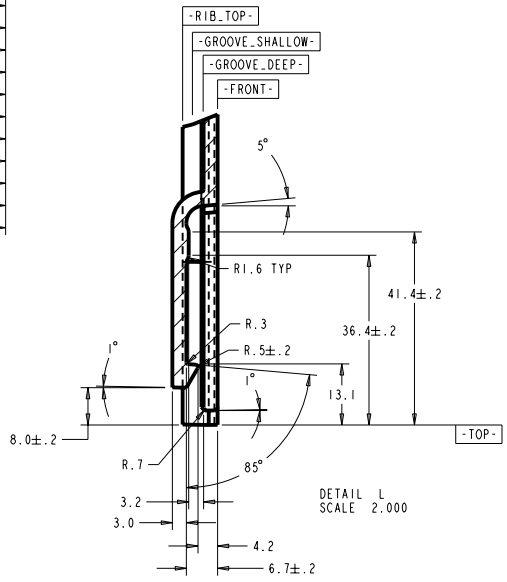

DETAIL L
SCALE 2.000

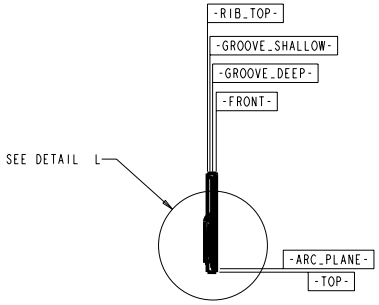

SECTION A-A

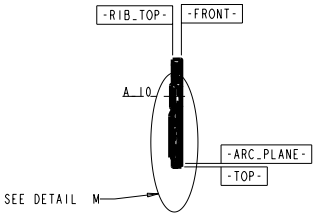

SECTION C-C

TOLERANCES		ORIGINATOR	T. Chase	16-Jan-07
.X	±0.1	DRAWN BY	T. Chase	16-Jan-07
.XX	±0.01	CHECKED	S. Sedler	28-Nov-07
.XXX	±0.001	APPROVED		
ANGLES	±0.5	USED ON: NOvA Manifolds		

NOvA Experiment (Fermilab E929)

University of Minnesota

IPND Bottom Raceway

Finish	Model Type: PART	Model File Name: IPND_RACE_BOT_TWOPC	Drawing File Name: IPND_RACE_BOT_TWOPC
	Scale 0.500:1	Drawing Number	Revision / Sheet 4 of 5

All dimensions are in mm unless specified otherwise