REV	DESCRIPTION	DATE

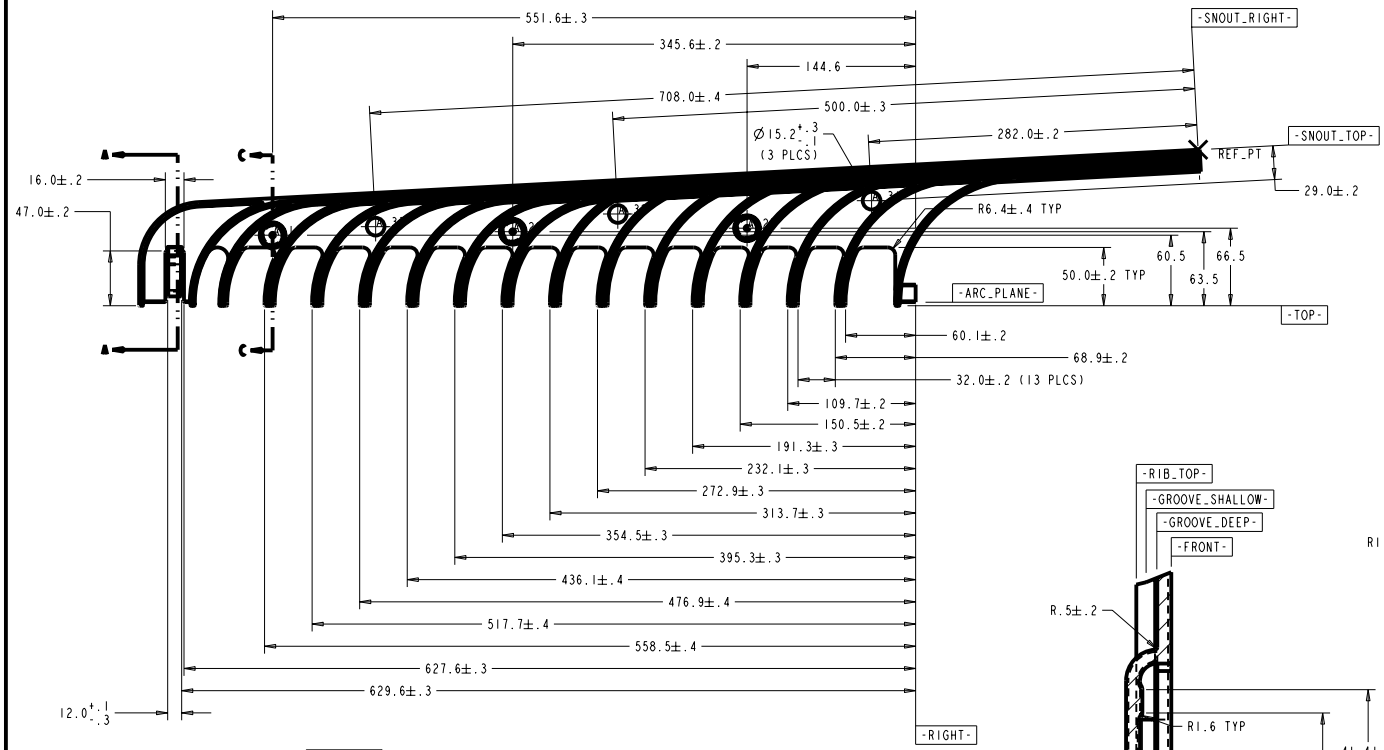

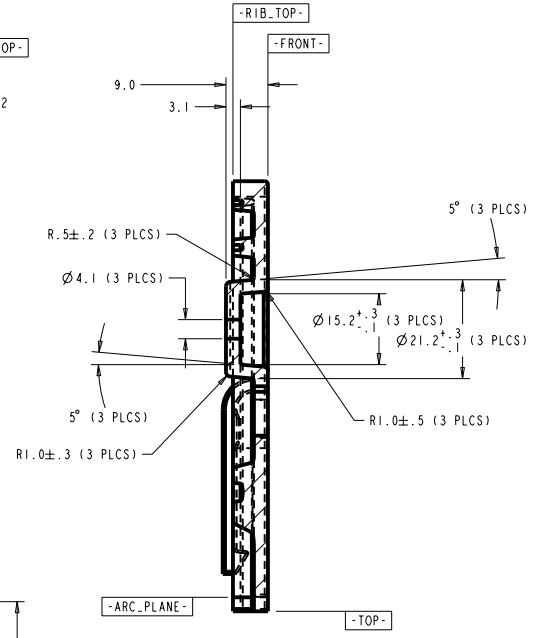

DETAIL L
SCALE 2.000

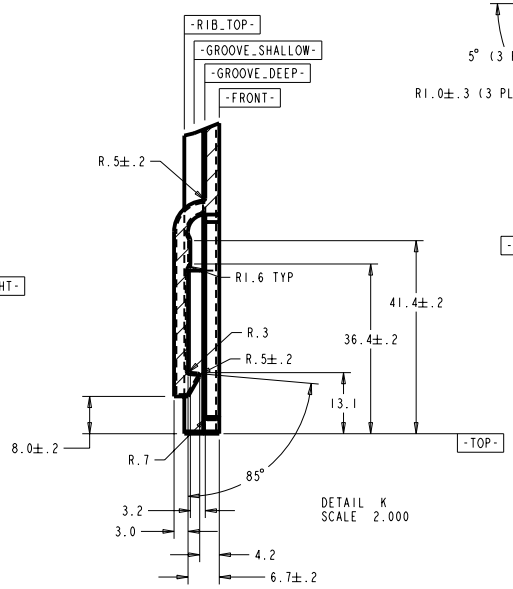

DETAIL K
SCALE 2.000

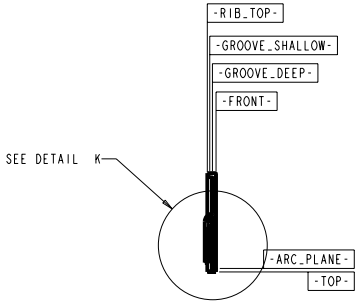

SECTION A-A

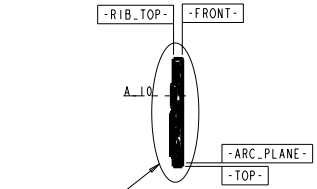

SECTION C-C

TOLERANCES		ORIGINATOR	T. Chase	16-Jan-07
.X	±0.1	DRAWN BY	T. Chase	16-Jan-07
.XX	±0.01	CHECKED	S. Sedler	28-Nov-07
.XXX	±0.001	APPROVED		
ANGLES	±0.5	USED ON: NOvA Manifolds		

NOvA Experiment (Fermilab E929)

University of Minnesota

IPND Bottom Raceway

Model Type:	Model File Name:	Drawing File Name:
PART	IPND_RACEWAY_BOT	IPND_RACEWAY_BOT
Scale: 0.500:1	Drawing Number	Revision / Sheet: 4 of 5

Finish

All dimensions are in mm unless specified otherwise