REV	DESCRIPTION	DATE

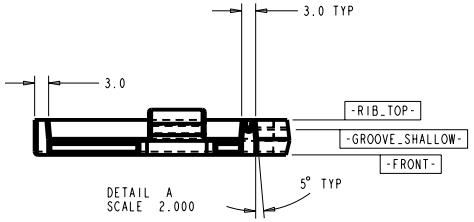

DETAIL A
SCALE 2.000

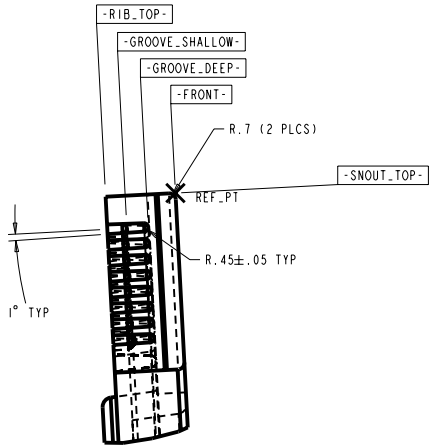

DETAIL B
SCALE 4.000

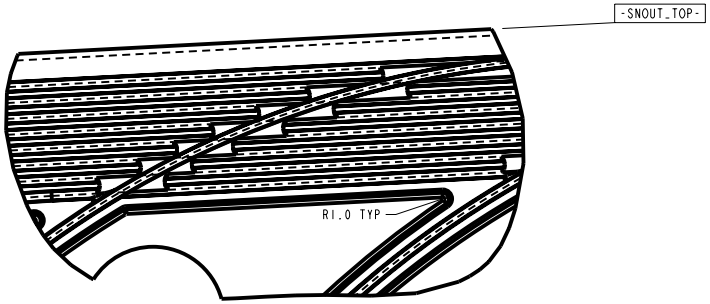

DETAIL C
SCALE 4.000

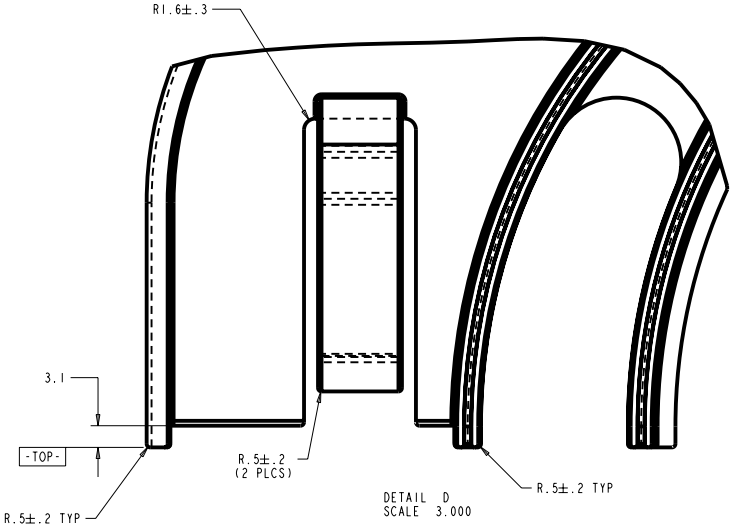

DETAIL D
SCALE 3.000

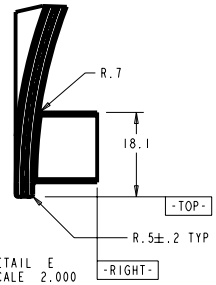

DETAIL E
SCALE 2.000

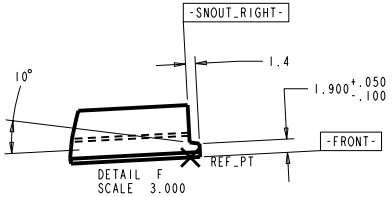

DETAIL F
SCALE 3.000

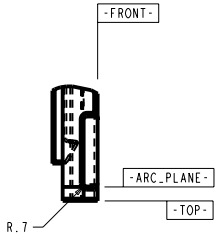

DETAIL H
SCALE 2.000

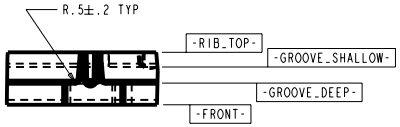

DETAIL G
SCALE 3.000

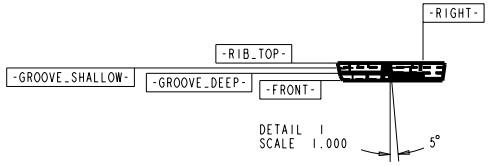

DETAIL I
SCALE 1.000

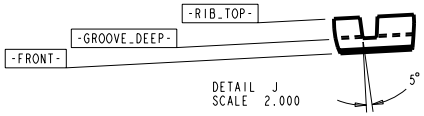

DETAIL J
SCALE 2.000

TOLERANCES		ORIGINATOR	T. Chase	12-Jan-07
.X	±0.1	DRAWN BY	T. Chase	12-Jan-07
.XX	±0.01	CHECKED	S. Sedler	28-Nov-07
.XXX	±0.001	APPROVED		
ANGLES	±0.5	USED ON: NOvA manifolds		

NOvA Experiment (Fermilab E929)

University of Minnesota

IPND Bottom Raceway

Finish	Model Type: PART	Model File Name: IPND_RACEWAY_BOT	Drawing File Name: IPND_RACEWAY_BOT
	Scale 0.500:1	Drawing Number	Revision / Sheet 3 of 5
	All dimensions are in mm unless specified otherwise		