REV	DESCRIPTION	DATE

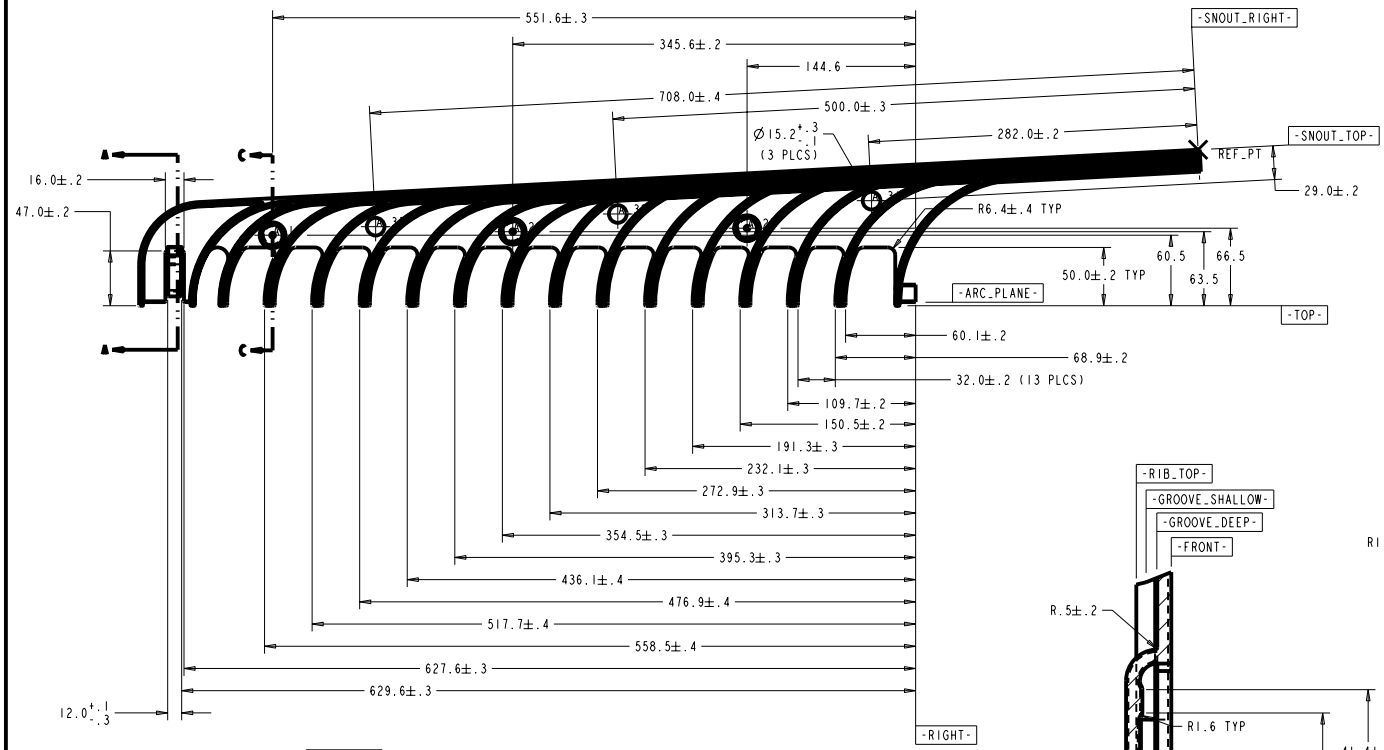

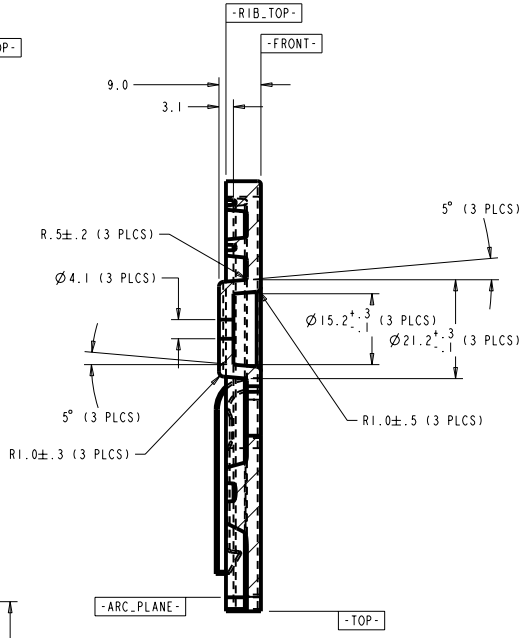

DETAIL L
SCALE 2.000

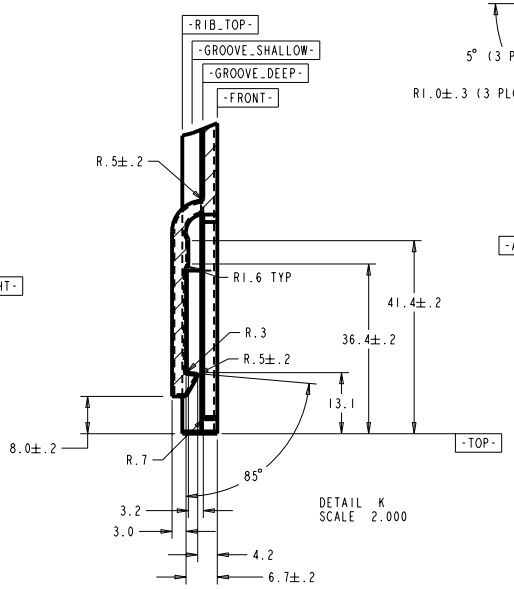

DETAIL K
SCALE 2.000

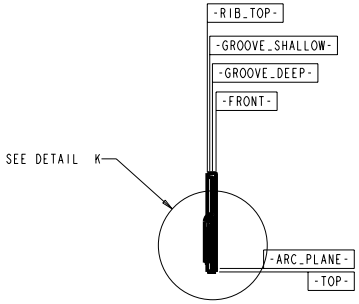

SECTION A-A

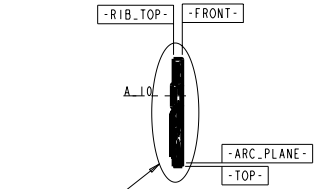

SECTION C-C

TOLERANCES		ORIGINATOR	T. Chase	16-Jan-07
.X	±0.1	DRAWN BY	T. Chase	16-Jan-07
.XX	±0.01	CHECKED		
.XXX	±0.001	APPROVED		
ANGLES	±0.5	USED ON: NOvA Manifolds		

NOvA Experiment (Fermilab E929)

University of Minnesota

IPND Bottom Raceway

Model Type: PART	Model File Name: IPND_RACEWAY_BOT	Drawing File Name: IPND_RACEWAY_BOT
Scale 0.500:1	Drawing Number	Revision / Sheet 4 of 5

Finish

All dimensions are in mm unless specified otherwise