REV	DESCRIPTION	DRAWN / APPROVED	DATE / DATE
A	VERTICAL PANEL SNOUTS NOW ALL POINT SAME DIRECTION, ROTATED HORZ. PANELS .1432°	G.SMITH	13-APR-2009
		P.LUKENS	10-JUL-2009
B	CHANGED HORIZ PLANES ROTATION FROM PLANULAR TO INDIVIDUAL MODULES. ADJUSTED DIMS. CHNG'D WEIGHT. UPDATED MANIFOLDS/SNOUTS	S.KINDELBERGER	07-OCT-2009
		D. FRIEND	08-OCT-2009
C	UPDATED VERTICAL MODULES FOR DRAIN VALVE ASSY. CHG'D NOTE 1 WEIGHT FROM 13,988 LBS. ADDED DETAIL F CHG'D HORZ MODULE GAP SPACING FROM .012 TO .0625	D.FRIEND	05-APR-2010
		D.FRIEND	28-MAY-2010

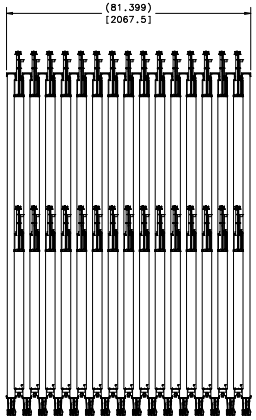

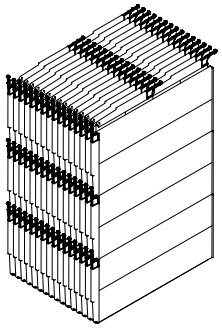

ISOMETRIC VIEW
SCALE: 1/32

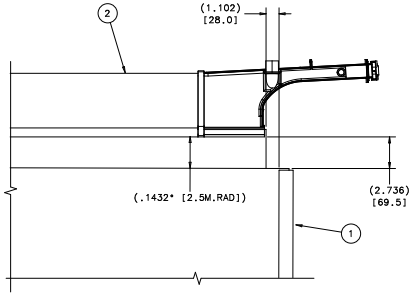

DETAIL A
SCALE: 1/4

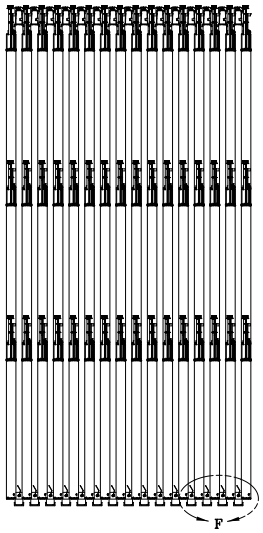

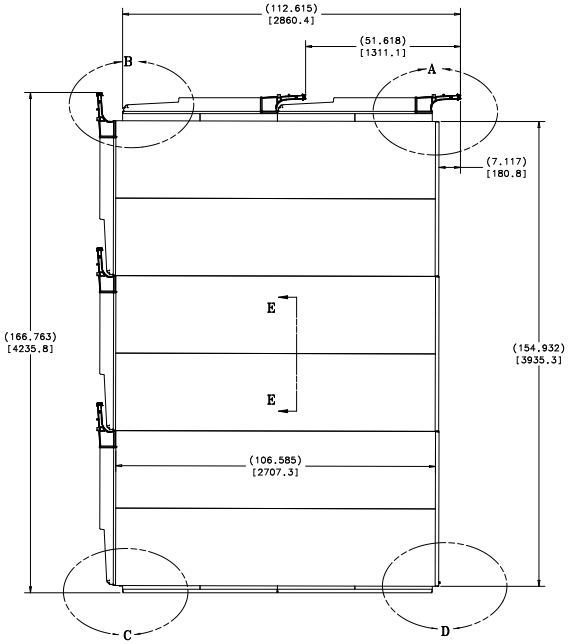

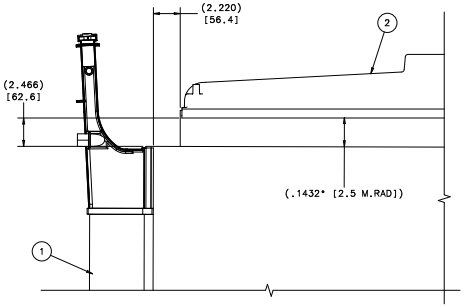

DETAIL B
SCALE: 1/4

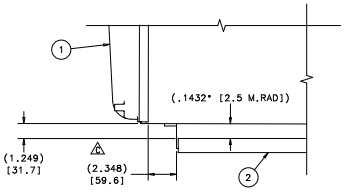

DETAIL C
SCALE: 1/4

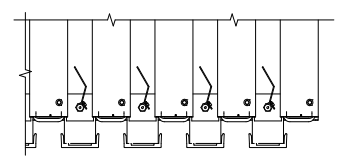

DETAIL F
SCALE: 1/4

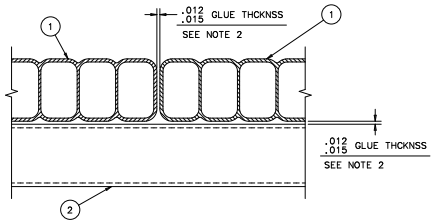

SECTION E-E
SCALE: 1/2

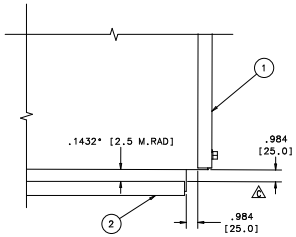

DETAIL D
SCALE: 1/4

2. DEVCON PLASTIC WELDER 60 ADHESIVE
1. APPROXIMATE WEIGHT OF ASSEMBLY WHEN MODULES ARE EMPTY IS 13,996 LBS.

NOTES:

ITEM	PART NO.	DESCRIPTION OR SIZE	QTY.
2	ME-444094	VERTICAL MODULE ASSEMBLY	30
1	ME-444095	HORIZONTAL MODULE ASSEMBLY	48

PARTS LIST

UNLESS OTHERWISE SPECIFIED			ORIGINATOR	V.GUARINO	21-DEC-2007
.XX	.XXX	ANGLES	DRAWN	D.FRIEND	21-DEC-2007
± ---	± .060	± ---	CHECKED	--------	13-APR-2009
			APPROVED	--------	13-APR-2009

1. BREAK ALL SHARP EDGES MAX.
2. DO NOT SCALE DRAWING.
3. DIMENSIONS BASED UPON ASME Y14.5M-1994
4. MAX. ALL MACH. SURFACES √
5. DRAWING UNITS:U.S.INCH

USED ON: ME-444635

MATERIAL: SEE PARTS LIST ABOVE

FERMI NATIONAL ACCELERATOR LABORATORY
UNITED STATES DEPARTMENT OF ENERGY

NOVA-DETECTOR_PROTOTYPE
IPND PVC MODULES
31 PANEL ASSY - HORIZONTAL BLOCK

SCALE	DRAWING NUMBER	SHEET	REV
1:16 & AS NOTED	3929.000-ME-444583	1 OF 1	C

CREATED WITH : Ideas12NXSeries | GROUP: PPD/MECHANICAL DEPARTMENT