REV	DESCRIPTION	DRAWN	DATE
		APPROVED	DATE
A	VERTICAL PANEL SNOUTS NOW ALL POINT SAME DIRECTION, AND ROTATED HORZ. PANELS .1432*	G SMITH	13-APR-2009
		P. LUKENS	10-JUL-2009
B	CHANGED HORIZ. PLANES ROTATION FROM PLANGLAR TO INDIVIDUAL MODULES, ADJUSTED DIMS AND CHANGED WEIGHT. UPDATED MANIFOLDS & SNOUTS	S.KINDELBERGER	07-OCT-2009
		D. FRIEND	08-OCT-2009
C	UPDATED VERTICAL MODULES FOR DRAIN VALVE. 4231C2, & CHANGED NOTE 1 WEIGHT FROM 14,119 LBS. HORZ MODULE GAP SPACING WAS .012 NOW .0625	D.FRIEND	05-APR-2010
		D.FRIEND	28-MAY-2010

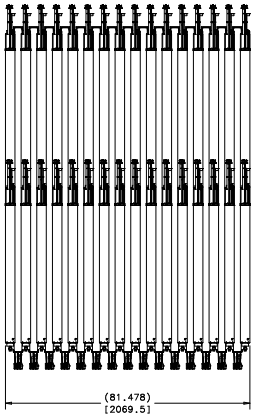

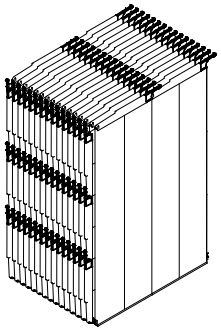

ISOMETRIC VIEW
SCALE: 1/32

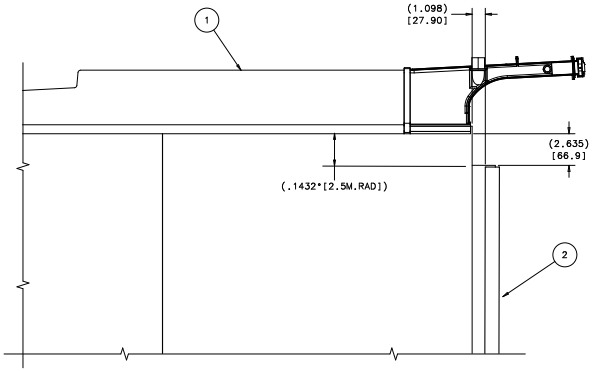

DETAIL A
SCALE: 1/4

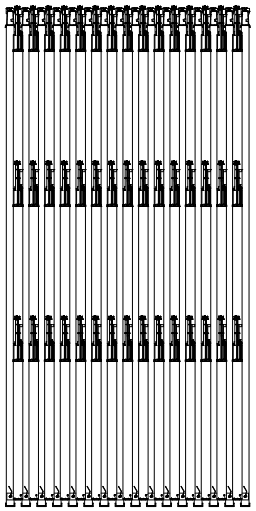

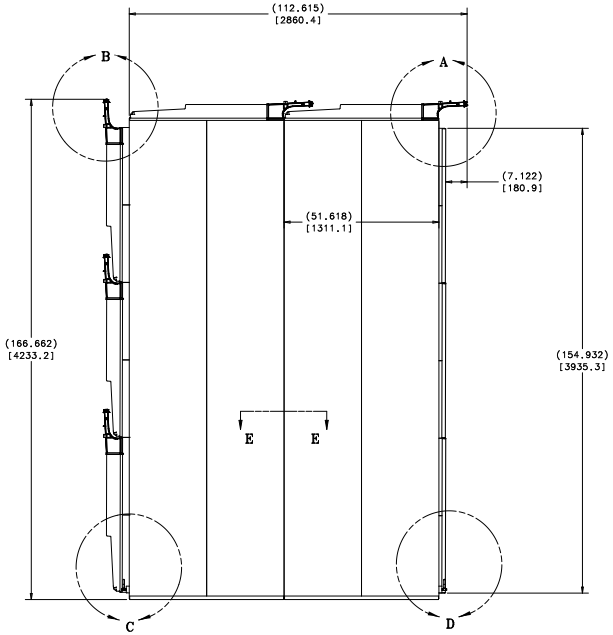

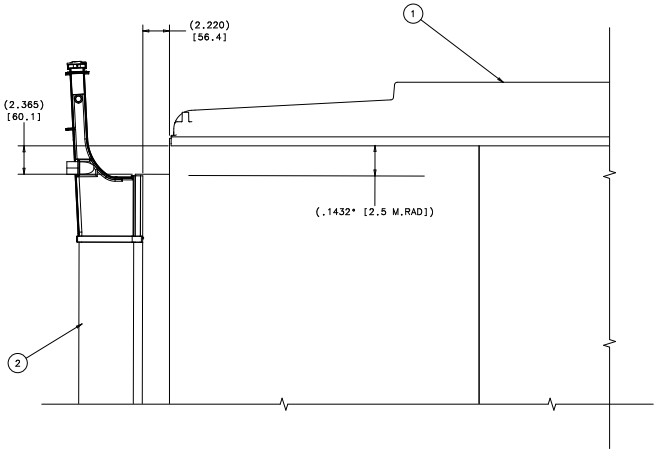

DETAIL B
SCALE: 1/4

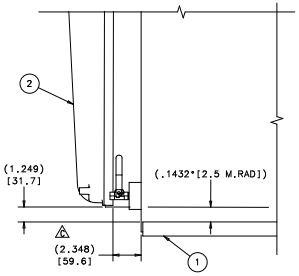

DETAIL C
SCALE: 1/4

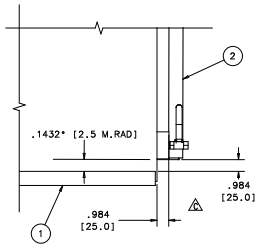

DETAIL D
SCALE: 1/4

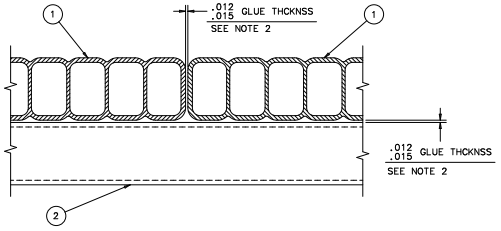

SECTION E-E
TYP. GLUE JOINT
SCALE: 1/2

2. DEVCON PLASTIC WELDER 60 ADHESIVE
1. APPROXIMATE WEIGHT OF ASSEMBLY WHEN MODULES ARE EMPTY IS 14,119 LBS.

NOTES:

ITEM	PART NO.	DESCRIPTION OR SIZE	QTY.
2	ME-444095	HORIZONTAL MODULE ASSEMBLY	45
1	ME-444094	VERTICAL MODULE ASSEMBLY	32

PARTS LIST

UNLESS OTHERWISE SPECIFIED	ORIGINATOR	V.QUARINO	19-DEC-2007
.XX .XXX ANGLES	DRAWN	S.KINDELBERGER	19-DEC-2007
± --- ± .060 ± ---	CHECKED	--------	13-APR-2009
1. BREAK ALL SHARP EDGES MAX.	APPROVED	--------	13-APR-2009
2. DO NOT SCALE DRAWING. 3. DIMENSIONS TO BE MET UPON ASSEMBLY. 4. MAX. ALL MACH. SURFACES 125	USED ON	ME-444202	
5. DRAWING UNITS: U.S. INCH	MATERIAL	SEE PARTS LIST ABOVE	

FERMI NATIONAL ACCELERATOR LABORATORY
UNITED STATES DEPARTMENT OF ENERGY

NOVA-DETECTOR_PROTOTYPE
IPND PVC MODULES
31 PANEL ASSY - VERTICAL BLOCK

SCALE	DRAWING NUMBER	SHEET	REV
1:15 & AS NOTED	3929.000-ME-444096	1 OF 1	C

CREATED WITH : Ideas12NXSeries GROUP: PPD/MECHANICAL DEPARTMENT