REV	DESCRIPTION	DRAWN / APPROVED	DATE / DATE
A	VERTICAL PANEL SNOUTS NOW ALL POINT SAME DIRECTION, AND ROTATED HORZ. PANELS .1432*	G SMITH	13-APR-2009
		P. LUKENS	10-JUL-2009
B	CHANGED HORIZ., PLANES ROTATION FROM PLANULAR TO INDIVIDUAL MODULES. ADJUSTED DIMS AND CHANGED WEIGHT. UPDATED MANIFOLDS & SNOUTS	S.KINDELBERGER	07-OCT-2009
		D. FRIEND	08-OCT-2009
C	UPDATED VERTICAL MODULES FOR DRAIN VALVE ASSY'S. CHG'D NOTE 1 WEIGHT FROM 14,110 LBS.	D.FRIEND	16-FEB-2010

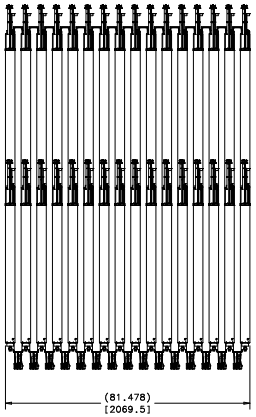

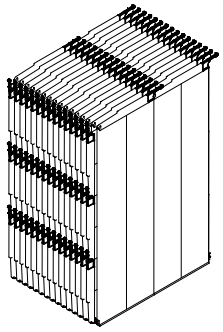

ISOMETRIC VIEW
SCALE: 1/32

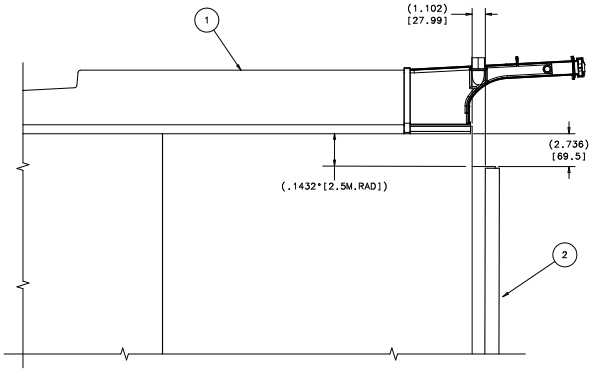

DETAIL A
SCALE: 1/4

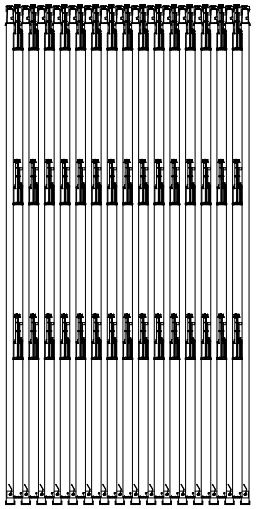

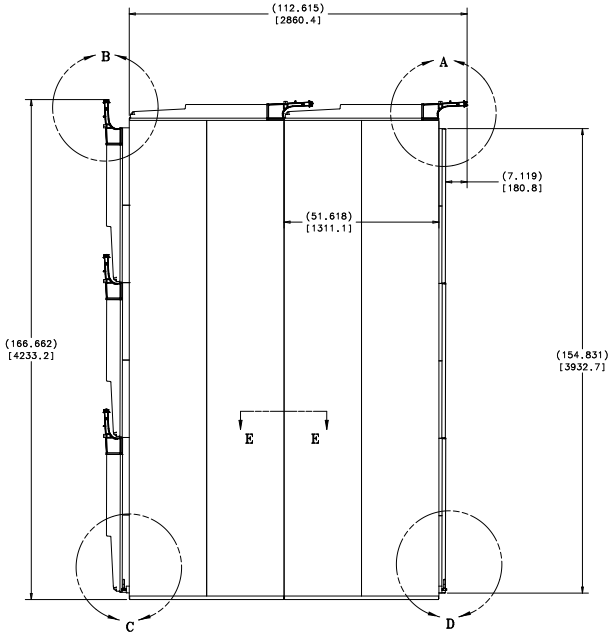

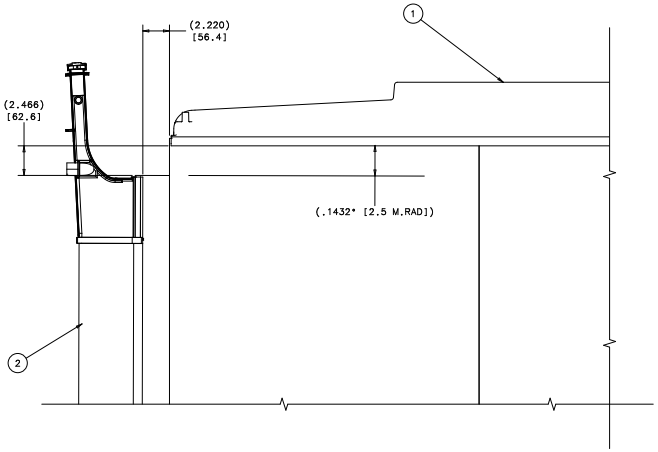

DETAIL B
SCALE: 1/4

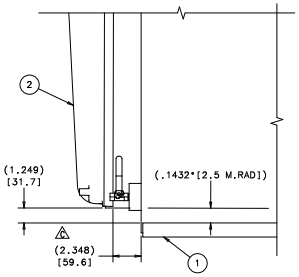

DETAIL C
SCALE: 1/4

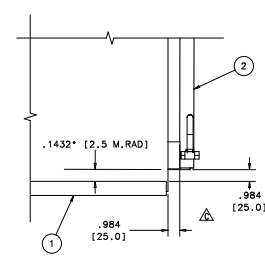

DETAIL D
SCALE: 1/4

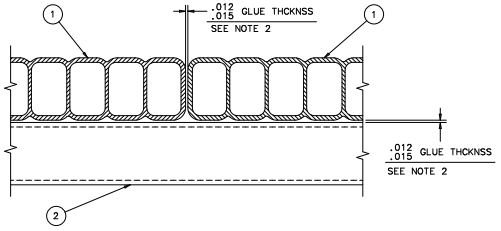

SECTION E-E
TYP. GLUE JOINT
SCALE: 1/2

NOTES:

2. DEVCON PLASTIC WELDER 60 ADHESIVE
1. APPROXIMATE WEIGHT OF ASSEMBLY WHEN MODULES ARE EMPTY IS 14,119 LBS.

ITEM	PART NO.	DESCRIPTION OR SIZE	QTY.
2	ME-444095	HORIZONTAL MODULE ASSEMBLY	45
1	ME-444094	VERTICAL MODULE ASSEMBLY	32

PARTS LIST

UNLESS OTHERWISE SPECIFIED			ORIGINATOR	V.GUARINO	19-DEC-2007
.XX	.XXX	ANGLES	DRAWN	S.KINDELBERGER	19-DEC-2007
± ---	± .060	± ---	CHECKED	---------	13-APR-2009
			APPROVED	---------	13-APR-2009

1. BREAK ALL SHARP EDGES MAX.
2. DO NOT SCALE DRAWING.
3. DIMENSIONS BASED UPON ASME Y14.5M-1994
4. MAX. ALL MACH. SURFACES 125
5. DRAWING UNITS:U.S.INCH

USED ON: ME-444202

MATERIAL: SEE PARTS LIST ABOVE

FERMI NATIONAL ACCELERATOR LABORATORY
UNITED STATES DEPARTMENT OF ENERGY

NOVA-DETECTOR_PROTOTYPE
IPND PVC MODULES
31 PANEL ASSY - VERTICAL BLOCK

SCALE	DRAWING NUMBER	SHEET	REV
1:16 & AS NOTED	3929.000-ME-444096	1 OF 1	C

CREATED WITH : Ideas12NXSeries | GROUP: PPD/MECHANICAL DEPARTMENT