REV	DESCRIPTION	DRAWN	DATE
		APPROVED	DATE
A	VERTICAL PANEL SNOUTS NOW ALL POINT SAME DIRECTION, AND ROTATED HORZ. PANELS .1432*	G SMITH	13-APR-2009
		P. LUKENS	10-JUL-2009

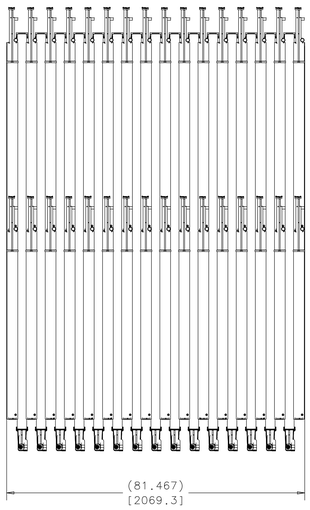

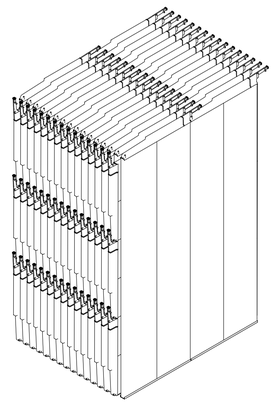

ISOMETRIC VIEW
SCALE: 1/32

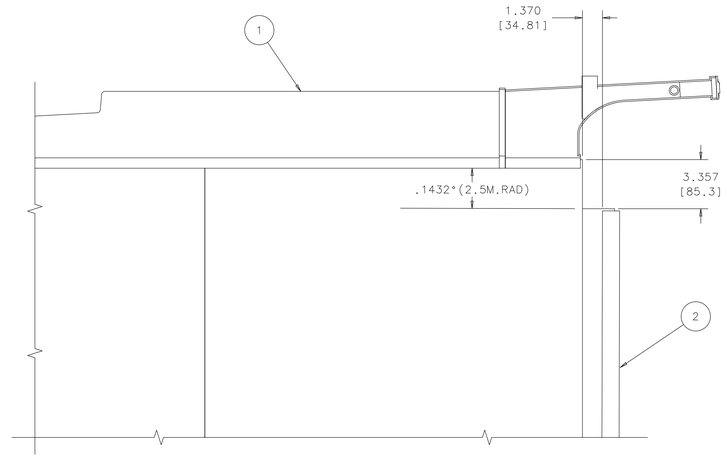

DETAIL A
SCALE: 1/4

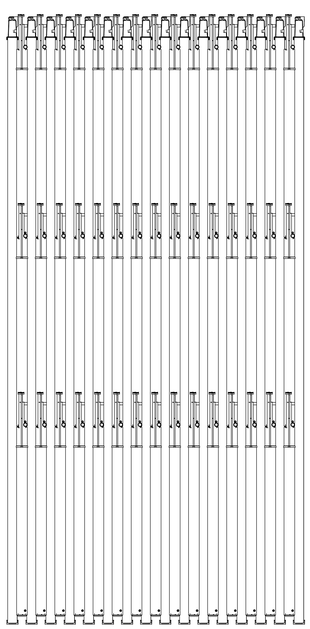

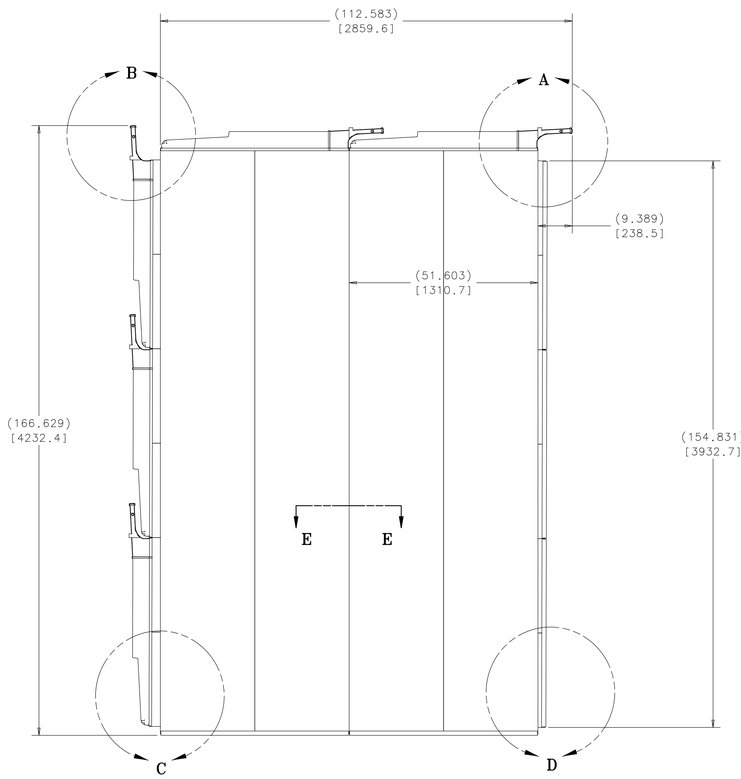

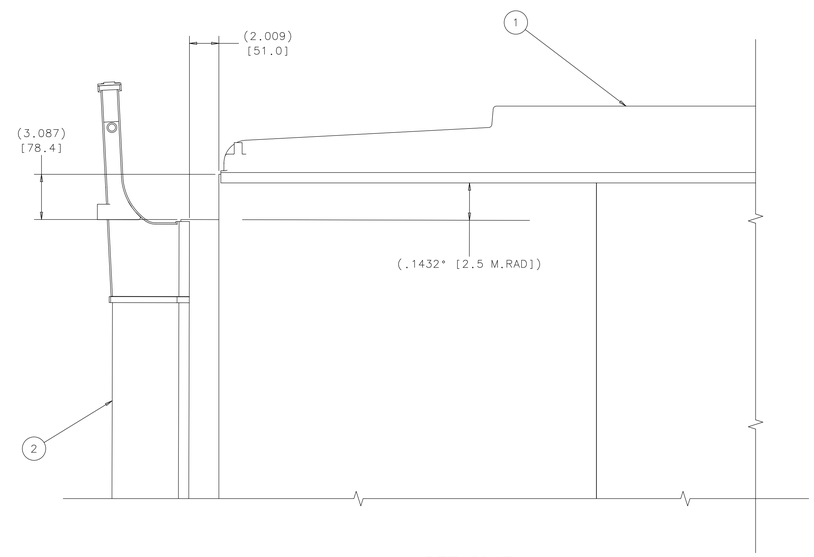

DETAIL B
SCALE: 1/4

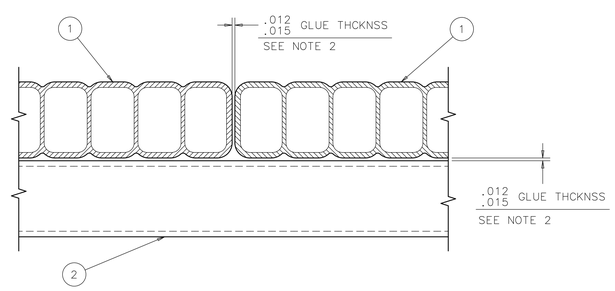

SECTION D-D
TYP. GLUE JOINT
SCALE: 1/2

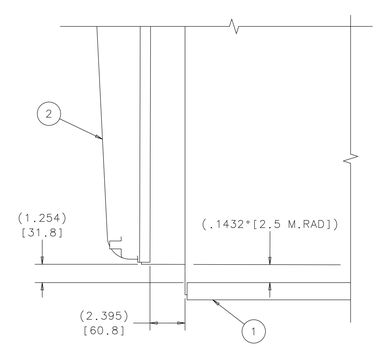

DETAIL C
SCALE: 1/4

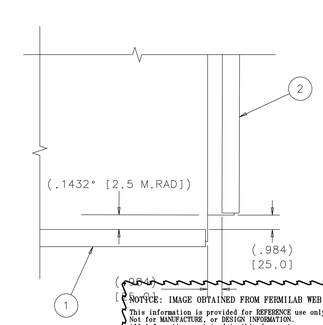

DETAIL D
SCALE: 1/4

2. DEVCON PLASTIC WELDER 60 ADHESIVE
1. APPROXIMATE WEIGHT OF ASSEMBLY WHEN MODULES ARE EMPTY IS 9,120 LBS.

NOTES:

NOTICE: IMAGE OBTAINED FROM FERMILAB WEB SITE

This information is provided for REFERENCE use only. Not for MANUFACTURE, or DESIGN INFORMATION. All information contained in this document represents work sponsored by an agency of the U.S. Government. Neither the U.S. Government nor any agency thereof, nor Universities Research Association, Inc., nor any of their employees or officers, makes any warranty, express or implied, or assumes any legal liability or responsibility for the accuracy, completeness, or usefulness of any information, apparatus, product or process disclosed, or represents that its use would not infringe privately owned rights.

ITEM	PART NO.	DESCRIPTION OR SIZE	QTY.
2	ME-444095	HORIZONTAL MODULE ASSEMBLY	45
1	ME-444094	VERTICAL MODULE ASSEMBLY	32

PARTS LIST

UNLESS OTHERWISE SPECIFIED	ORIGINATOR	V.GUARINO	19-DEC-2007
.XX .XXX ANGLES	DRAWN	S.KINDELBERGER	19-DEC-2007
± --- ± .060 ± ---	CHECKED	---------	13-APR-2009
1. BREAK ALL SHARP EDGES MAX.	APPROVED	--------	13-APR-2009
2. DO NOT SCALE DRAWING. 3. DIMENSIONS BASED UPON ASME Y14.5M-1994 4. MAX. ALL MACH. SURFACES 125	USED ON	ME-444202	
5. DRAWING UNITS: U.S.INCH	MATERIAL	SEE PARTS LIST ABOVE	

FERMI NATIONAL ACCELERATOR LABORATORY
UNITED STATES DEPARTMENT OF ENERGY

NOVA-DETECTOR_PROTOTYPE
IPND PVC MODULES
31 PANEL ASSY - VERTICAL BLOCK

SCALE	DRAWING NUMBER	SHEET	REV
1:16 & AS NOTED	3929.000-ME-444096	1 OF 1	A

CREATED WITH : Ideas12NXSeries GROUP: PPD/MECHANICAL DEPARTMENT