| REV | DESCRIPTION | DRAWN | DATE |
|---|---|---|---|
| | | APPROVED | DATE |
| A | VERTICAL PANEL SNOUTS NOW ALL POINT SAME DIRECTION, ROTATED HORZ. PANELS ,1432* | G.SMITH | 13-APR-2009 |

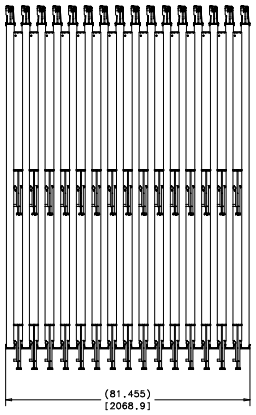


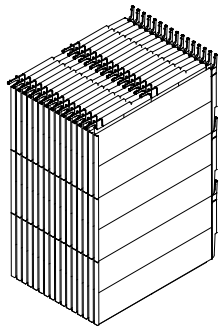

ISOMETRIC VIEW
SCALE: 1/32

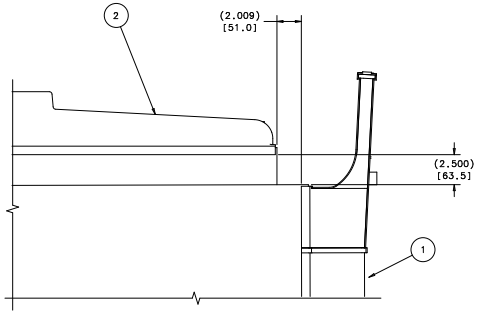


DETAIL A
SCALE: 1/4

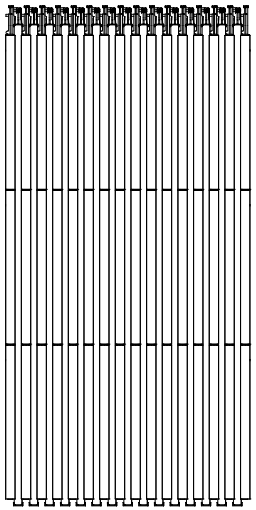

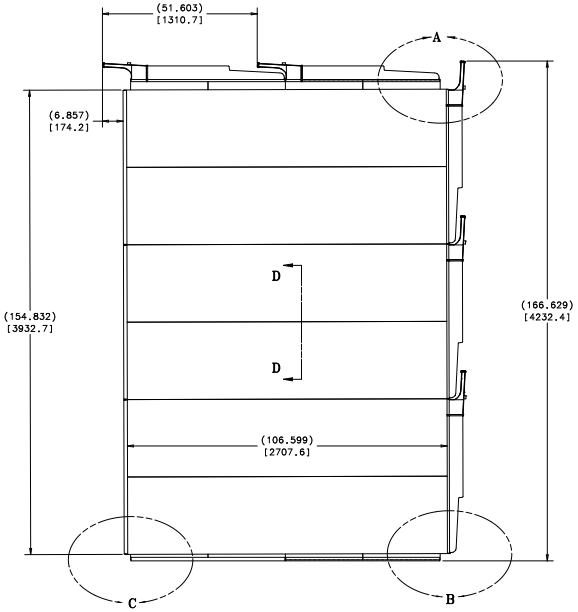


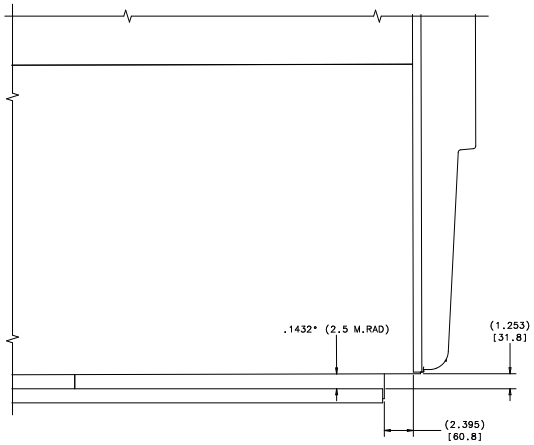


DETAIL B
SCALE: 1/4

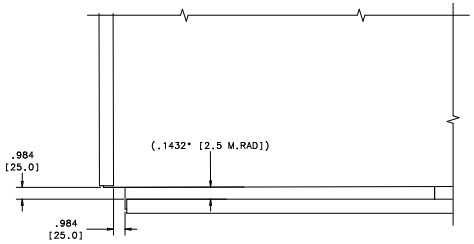


DETAIL C
SCALE: 1/4

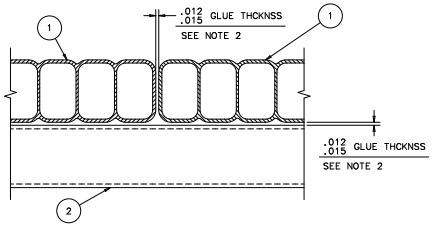


SECTION D-D
SCALE: 1/2

NOTES:

2. DEVCON PLASTIC WELDER 60 ADHESIVE
1. APPROXIMATE WEIGHT OF ASSEMBLY WHEN MODULES ARE EMPTY IS 9.030 LBS.

| ITEM | PART NO. | DESCRIPTION OR SIZE | QTY. |
|---|---|---|---|
| 2 | ME-444094 | VERTICAL MODULE ASSEMBLY | 30 |
| 1 | ME-444095 | HORIZONTAL MODULE ASSEMBLY | 48 |

PARTS LIST

| UNLESS OTHERWISE SPECIFIED | | | ORIGINATOR | V.GUARINO | 21-DEC-2007 |
|---|---|---|---|---|---|
| .XX | .XXX | ANGLES | DRAWN | D.FRIEND | 21-DEC-2007 |
| ± --- | ± .060 | ± --- | CHECKED | | |
| 1. BREAK ALL SHARP EDGES .005 | | | APPROVED | | |
| 2. DO NOT SCALE DRAWING. 3. DIMENSIONS BASED UPON ASME Y14.5M-1994 | | | USED ON | ME-444635 | |
| 4. ORX. ALL MACH. SURFACES | | | MATERIAL | SEE PARTS LIST ABOVE | |
| 5. DRAWING UNITS: U.S.INCH | | | | | |

**FERMI NATIONAL ACCELERATOR LABORATORY**
UNITED STATES DEPARTMENT OF ENERGY

NOVA-DETECTOR_PROTOTYPE
IPND PVC MODULES
31 PANEL ASSY - HORIZONTAL BLOCK

| SCALE | DRAWING NUMBER | SHEET | REV |
|---|---|---|---|
| 1:10 & AS NOTED | 3929.000-ME-444583 | 1 OF 1 | A |

CREATED WITH : Ideas12NXSeries GROUP: PPD/MECHANICAL DEPARTMENT