REV	DESCRIPTION	DRAWN	DATE
		APPROVED	DATE
A	VERTICAL PANEL SNOUTS NOW ALL POINT SAME DIRECTION, ROTATED HORZ. PANELS ,1432*	G.SMITH	21-MAR-2009

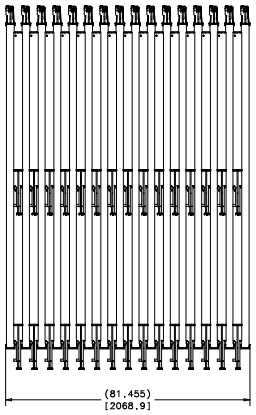

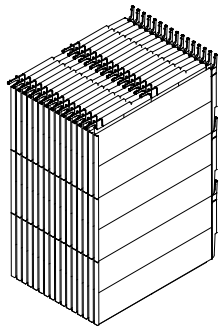

ISOMETRIC VIEW
SCALE: 1/32

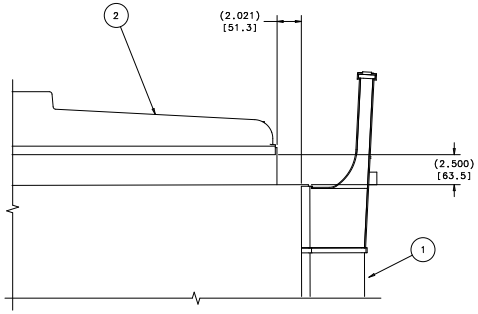

DETAIL A
SCALE: 1/4

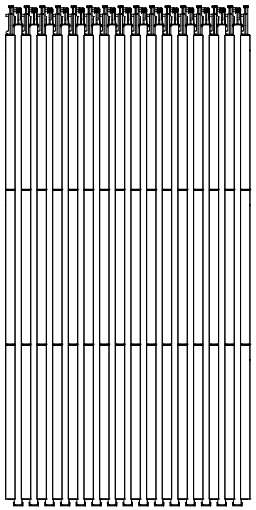

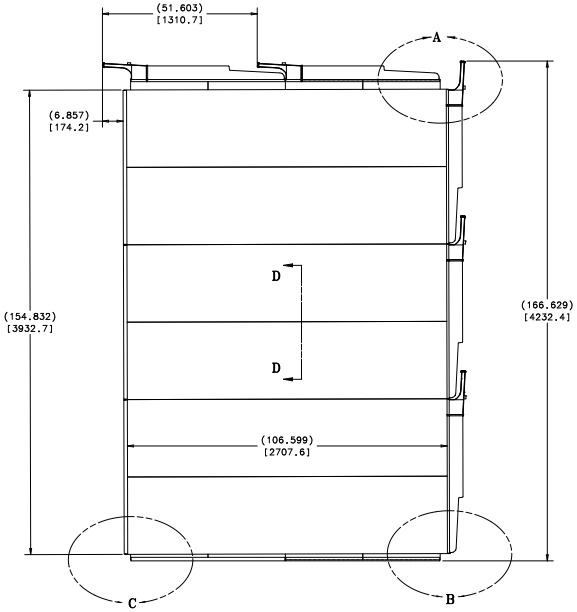

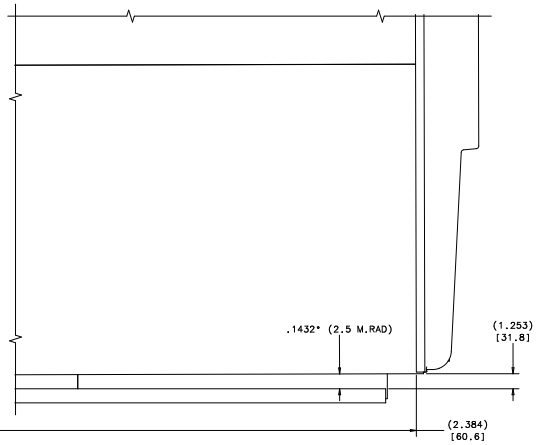

DETAIL B
SCALE: 1/4

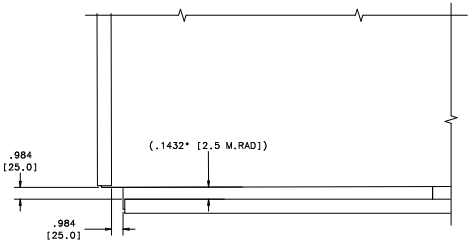

DETAIL C
SCALE: 1/4

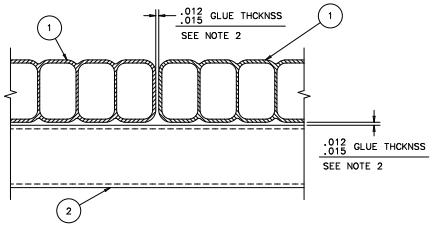

SECTION D-D
SCALE: 1/2

NOTES:

2. DEVCON PLASTIC WELDER 60 ADHESIVE
1. APPROXIMATE WEIGHT OF ASSEMBLY WHEN MODULES ARE EMPTY IS 9,030 LBS.

ITEM	PART NO.	DESCRIPTION OR SIZE	QTY.
2	ME-444094	VERTICAL MODULE ASSEMBLY	30
1	ME-444095	HORIZONTAL MODULE ASSEMBLY	48

PARTS LIST

UNLESS OTHERWISE SPECIFIED			ORIGINATOR	V.GUARINO	21-DEC-2007
.XX	.XXX	ANGLES	DRAWN	D.FRIEND	21-DEC-2007
± ---	± .060	± ---	CHECKED		
			APPROVED		

1. BREAK ALL SHARP EDGES MAX.
2. DO NOT SCALE DRAWING.
3. DIMENSIONS BASED UPON ASME Y14.5M-1994
4. BRK. ALL SHARP SURFACES
5. DRAWING UNITS:U.S.INCH

USED ON: ME-444635

MATERIAL: SEE PARTS LIST ABOVE

FERMI NATIONAL ACCELERATOR LABORATORY
UNITED STATES DEPARTMENT OF ENERGY

NOVA-DETECTOR_PROTOTYPE
IPND PVC MODULES
31 PANEL ASSY - HORIZONTAL BLOCK

SCALE	DRAWING NUMBER	SHEET	REV
1:10 & AS NOTED	3929.000-ME-444583	1 OF 1	A

CREATED WITH : Ideas12NXSeries GROUP: PPD/MECHANICAL DEPARTMENT