REV	DESCRIPTION	DRAWN	DATE
		APPROVED	DATE
A	VERTICAL PANEL SNOUTS NOW ALL POINT SAME DIRECTION, AND ROTATED HORZ. PANELS .1432*	G SMITH	21-MAR-2009

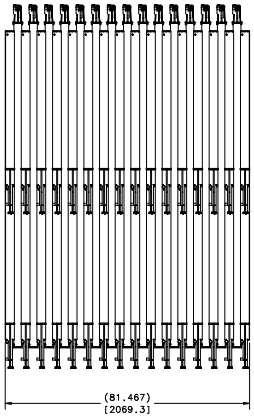

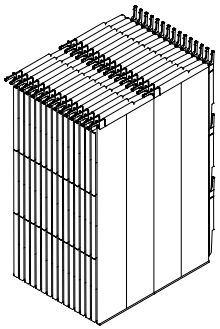

ISOMETRIC VIEW
SCALE: 1/32

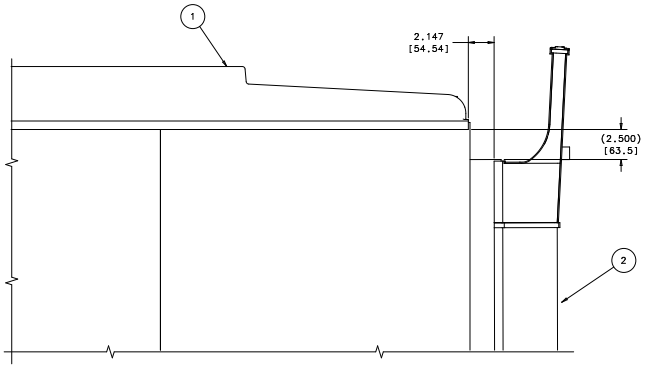

DETAIL A
SCALE: 1/4

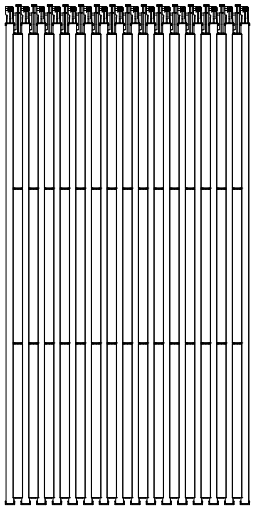

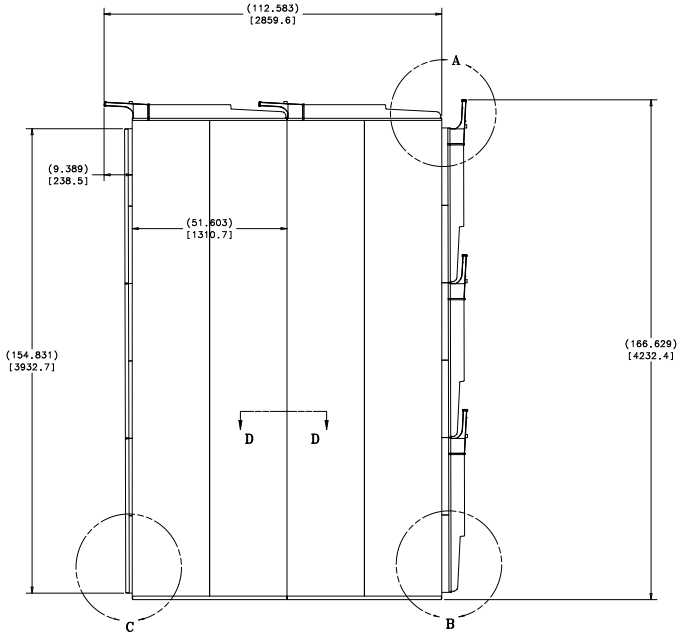

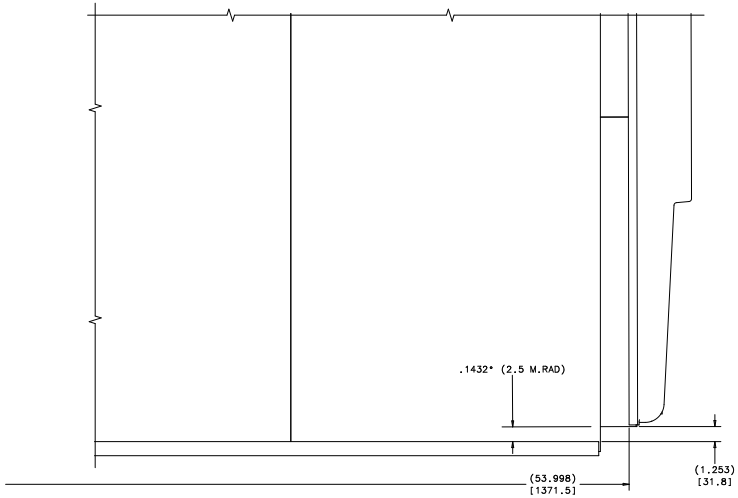

DETAIL B
SCALE: 1/4

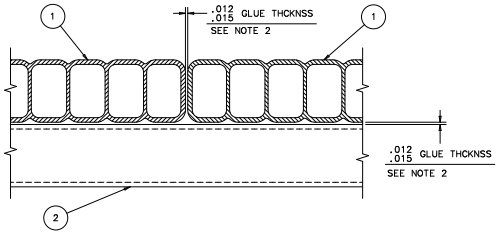

SECTION D-D
TYP. GLUE JOINT
SCALE: 1/2

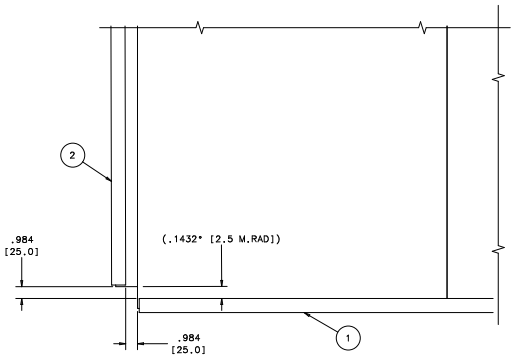

DETAIL C
SCALE: 1/4

NOTES:

1. APPROXIMATE WEIGHT OF ASSEMBLY WHEN MODULES ARE EMPTY IS 9,120 LBS.
2. DEVCON PLASTIC WELDER 60 ADHESIVE

ITEM	PART NO.	DESCRIPTION OR SIZE	QTY.
2	ME-444095	HORIZONTAL MODULE ASSEMBLY	45
1	ME-444094	VERTICAL MODULE ASSEMBLY	32

PARTS LIST

UNLESS OTHERWISE SPECIFIED			ORIGINATOR	V.QUARINO	19-DEC-2007
.XX	.XXX	ANGLES	DRAWN	S.KINDELBERGER	19-DEC-2007
± ---	± .060	± ---	CHECKED		
1. BREAK ALL SHARP EDGES .005			APPROVED		
2. DO NOT SCALE DRAWING.			USED ON	ME-444202	
3. DIMENSIONS BASED UPON ASME Y14.5M-1994					
4. MAX. ALL MACH. SURFACES 125			MATERIAL	SEE PARTS LIST ABOVE	
5. DRAWING UNITS: U.S. INCH					

FERMI NATIONAL ACCELERATOR LABORATORY
UNITED STATES DEPARTMENT OF ENERGY

NOVA-DETECTOR_PROTOTYPE
IPND PVC MODULES
31 PANEL ASSY - VERTICAL BLOCK

SCALE	DRAWING NUMBER	SHEET	REV
1:10 & AS NOTED	3929.000-ME-444096	1 OF 1	A

CREATED WITH : Ideas12NXSeries GROUP: PPD/MECHANICAL DEPARTMENT