REV	DESCRIPTION	DRAWN	DATE
		APPROVED	DATE

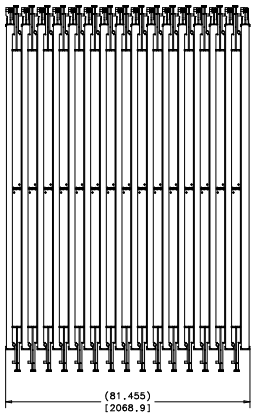

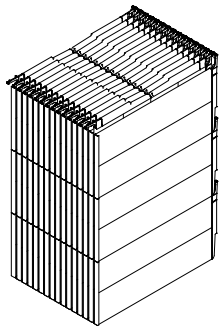

ISOMETRIC VIEW
SCALE: 1/32

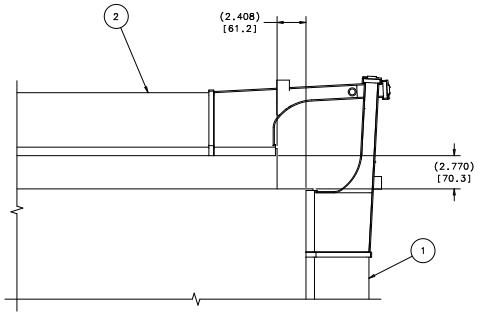

DETAIL A
SCALE: 1/4

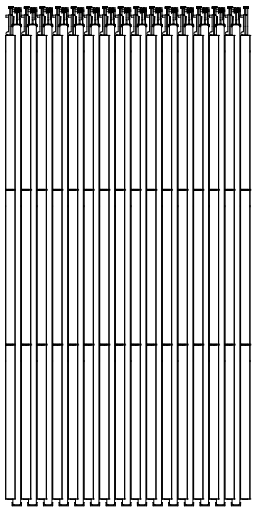

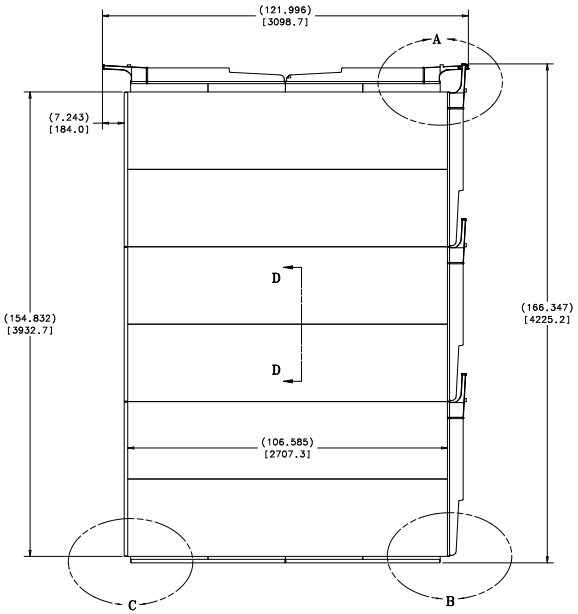

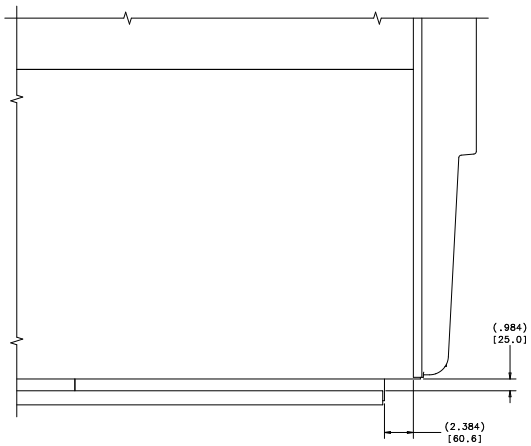

DETAIL B
SCALE: 1/4

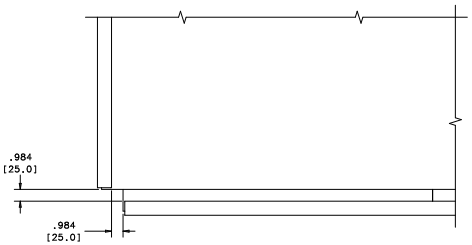

DETAIL C
SCALE: 1/4

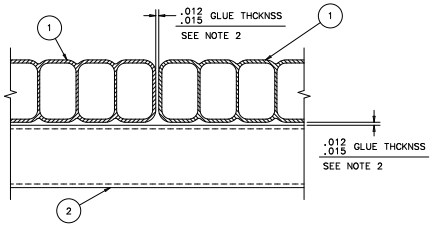

SECTION D-D
SCALE: 1/2

2. DEVCON PLASTIC WELDER 60 ADHESIVE
1. APPROXIMATE WEIGHT OF ASSEMBLY WHEN MODULES ARE EMPTY IS 9,030 LBS.

NOTES:

ITEM	PART NO.	DESCRIPTION OR SIZE	QTY.
2	ME-444094	VERTICAL MODULE ASSEMBLY	30
1	ME-444095	HORIZONTAL MODULE ASSEMBLY	48

PARTS LIST

UNLESS OTHERWISE SPECIFIED					
.XX	.XXX	ANGLES	ORIGINATOR	V.GUARINO	21-DEC-2007
± ---	± .060	± ---	DRAWN	D.FRIEND	21-DEC-2007
			CHECKED		
			APPROVED		

1. BREAK ALL SHARP EDGES MAX.
2. DO NOT SCALE DRAWING.
3. DIMENSIONS BASED UPON ASME Y14.5M-1994
4. MAX. ALL MACH. SURFACES
5. DRAWING UNITS: U.S. INCH

USED ON: ME-444635

MATERIAL: SEE PARTS LIST ABOVE

FERMI NATIONAL ACCELERATOR LABORATORY
UNITED STATES DEPARTMENT OF ENERGY

NOVA-DETECTOR_PROTOTYPE
IPND PVC MODULES
31 PANEL ASSY - HORIZONTAL BLOCK

SCALE	DRAWING NUMBER	SHEET	REV
1:16 & AS NOTED	3929.000-ME-444583	1 OF 1	

CREATED WITH : Ideas12NXSeries | GROUP: PPD/MECHANICAL DEPARTMENT