REV	DESCRIPTION	DRAWN	DATE
		APPROVED	DATE

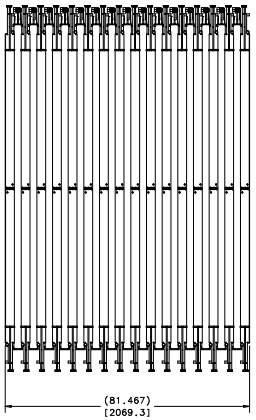

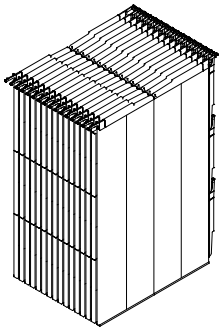

ISOMETRIC VIEW
SCALE: 1/32

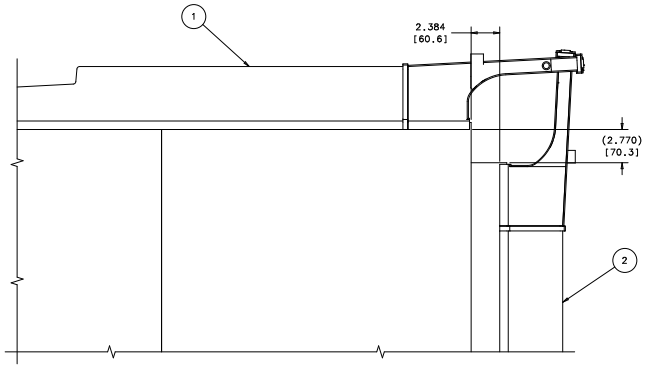

DETAIL A
SCALE: 1/4

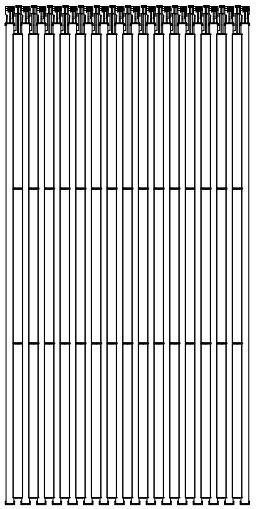

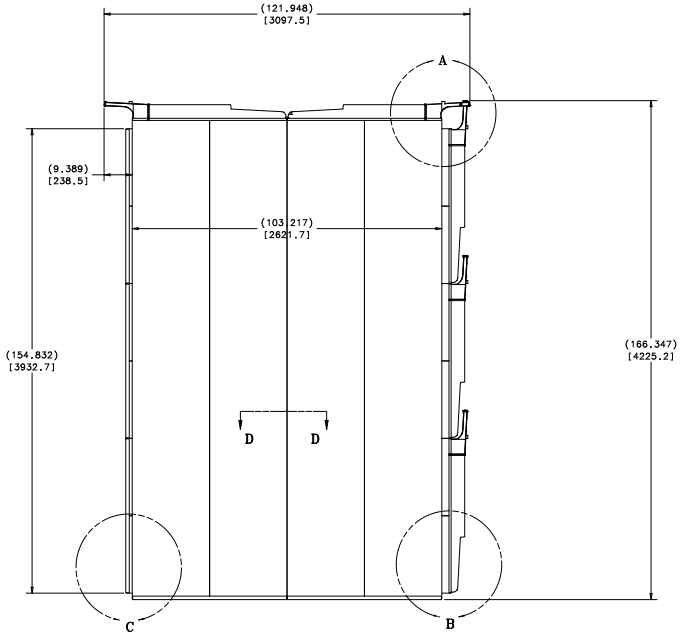

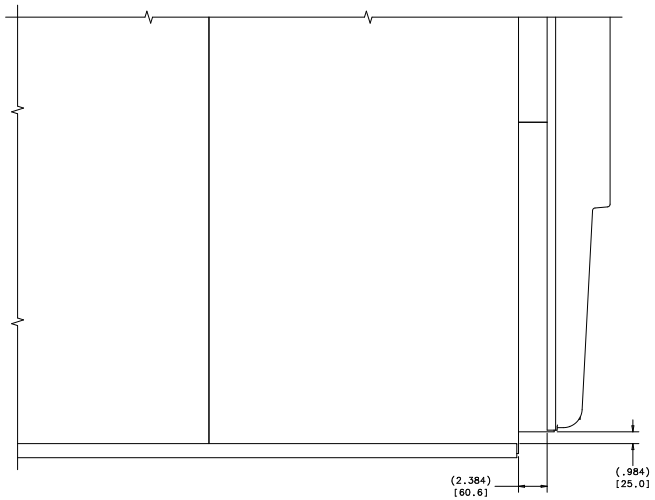

DETAIL B
SCALE: 1/4

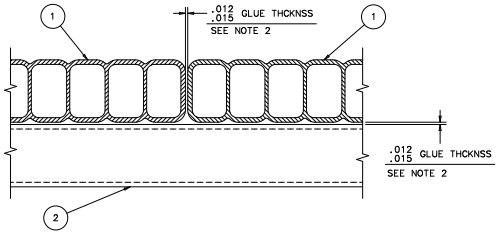

SECTION D-D
TYP. GLUE JOINT
SCALE: 1/2

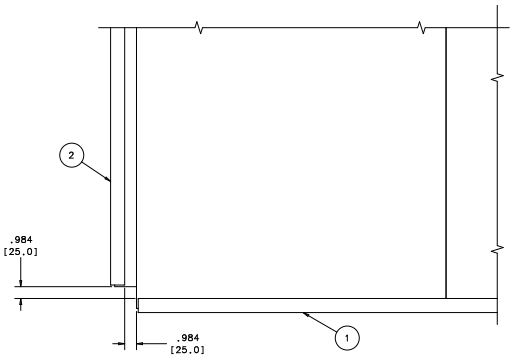

DETAIL C
SCALE: 1/4

2. DEVCON PLASTIC WELDER 60 ADHESIVE
1. APPROXIMATE WEIGHT OF ASSEMBLY WHEN MODULES ARE EMPTY IS 9,120 LBS.

NOTES:

ITEM	PART NO.	DESCRIPTION OR SIZE	QTY.
2	ME-444095	HORIZONTAL MODULE ASSEMBLY	45
1	ME-444094	VERTICAL MODULE ASSEMBLY	32

PARTS LIST

UNLESS OTHERWISE SPECIFIED			ORIGINATOR	V.QUARINO	19-DEC-2007
.XX	.XXX	ANGLES	DRAWN	S.KINDELBERGER	19-DEC-2007
± ---	± .060	± ---	CHECKED		
			APPROVED		

1. BREAK ALL SHARP EDGES .005
2. DO NOT SCALE DRAWING.
3. DIMENSIONS BASED UPON ASME Y14.5M-1994
4. MAX. ALL MACH. SURFACES 125
5. DRAWING UNITS: U.S. INCH

USED ON: ME-444202

MATERIAL: SEE PARTS LIST ABOVE

FERMI NATIONAL ACCELERATOR LABORATORY
UNITED STATES DEPARTMENT OF ENERGY

NOVA-DETECTOR_PROTOTYPE
IPND PVC MODULES
31 PANEL ASSY - VERTICAL BLOCK

SCALE	DRAWING NUMBER	SHEET	REV
1:16 & AS NOTED	3929.000-ME-444096	1 OF 1	

CREATED WITH : Ideas12NXSeries GROUP: PPD/MECHANICAL DEPARTMENT