| REV | DESCRIPTION | DRAWN | DATE |
|---|---|---|---|
| | | APPROVED | DATE |

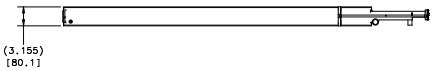


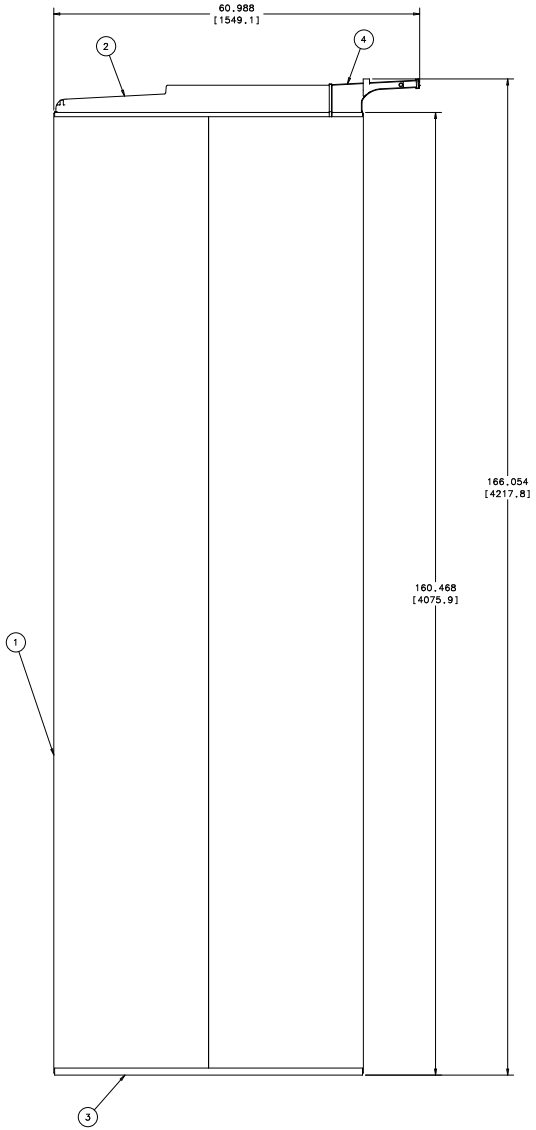


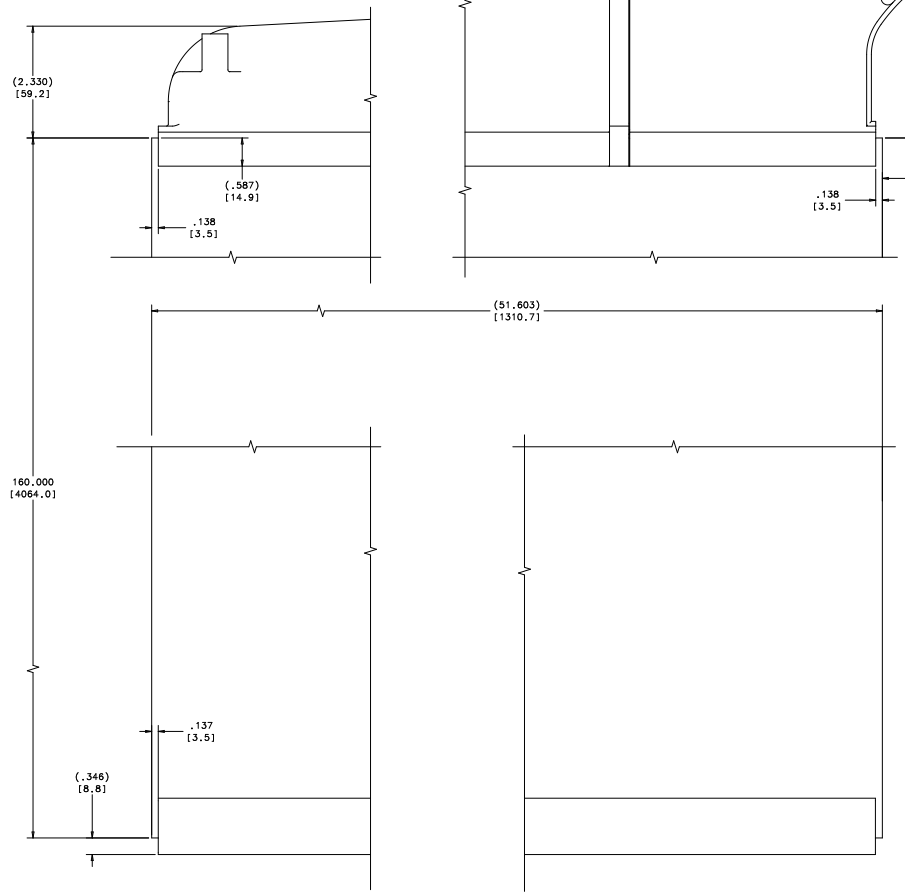


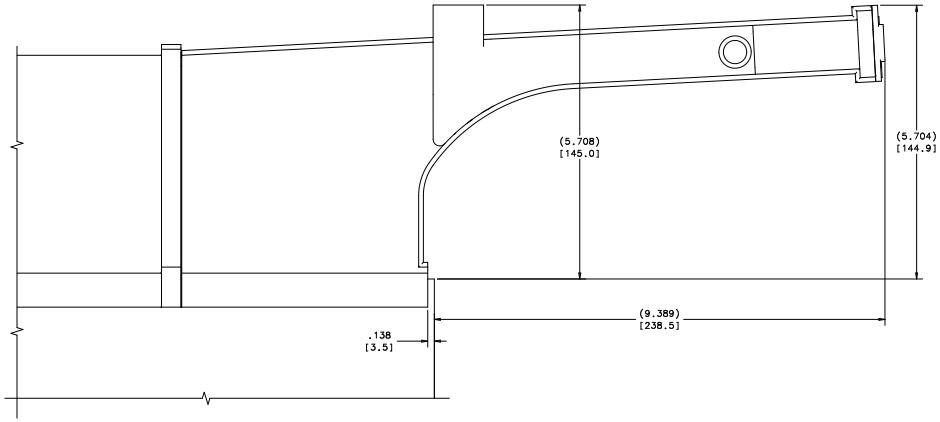


ENLARGED CORNER VIEWS

| ITEM | PART NO. | DESCRIPTION OR SIZE | QTY. |
|---|---|---|---|
| 4 | | SNOUT ASSY--SEE NOTE 2 | 1 |
| 3 | | BOTTOM SEAL--SEE NOTE 2 | 1 |
| 2 | | MANIFOLD--SEE NOTE 2 | 1 |
| 1 | MD-444816 | 16 CELL VERTICAL EXTRUSIONS GLUED | 1 |

PARTS LIST

| UNLESS OTHERWISE SPECIFIED | | | ORIGINATOR | V.QUARINO | 18-DEC-2007 |
|---|---|---|---|---|---|
| .XX | .XX | ANGLES | DRAWN | D.FRIEND | 18-DEC-2007 |
| ± --- | ± .060 | ± --- | CHECKED | | |
| | | | APPROVED | | |

1. BREAK ALL SHARP EDGES MAX.
2. DO NOT SCALE DRAWING.
3. DIMENSIONS BASED UPON ASME Y14.5M-1994.
4. MAX. ALL MACH. SURFACES $\sqrt{}$
5. DRAWING UNITS:U.S.INCH

USED ON: ME-444096 & ME-444583

MATERIAL: SEE PARTS LIST ABOVE

**FERMI NATIONAL ACCELERATOR LABORATORY**
UNITED STATES DEPARTMENT OF ENERGY

NOVA-DETECTOR_PROTOTYPE
IPND PVC MODULES
VERTICAL MODULE ASSEMBLY

| SCALE | DRAWING NUMBER | SHEET | REV |
|---|---|---|---|
| 1:8.4 1:1 | 3929.000-ME-444094 | 1 OF 1 | |

CREATED WITH : Ideas12NXSeries GROUP: PPD/MECHANICAL DEPARTMENT

2. ALL INTERNAL PIECE PARTS/SUB-ASSEMBLIES ARE AS PROVIDED BY THE UNIV. OF MINNESOTA.

1. ESTIMATED WEIGHT = 168 LBS.

NOTES: