REV	DESCRIPTION	DRAWN	DATE
		APPROVED	DATE

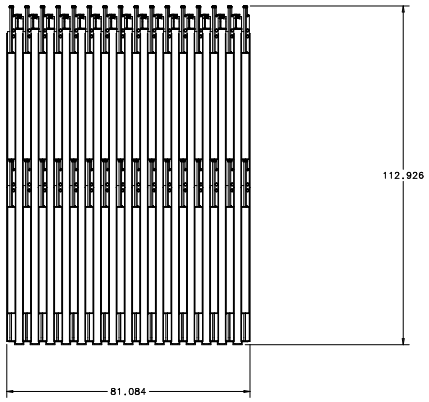

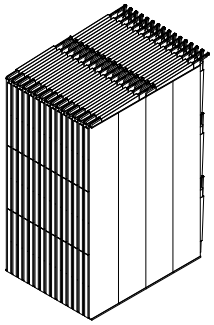

ISOMETRIC VIEW
SCALE: 1/32

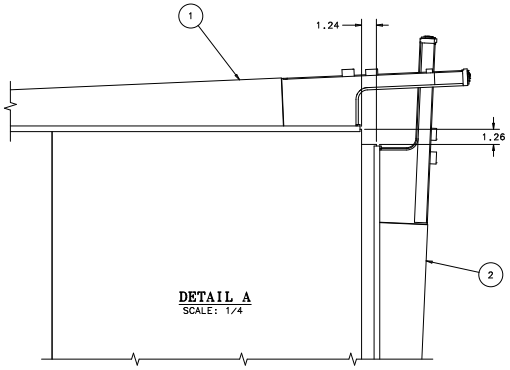

DETAIL A
SCALE: 1/4

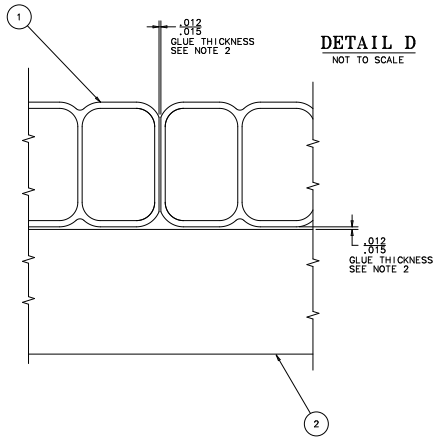

DETAIL D
NOT TO SCALE

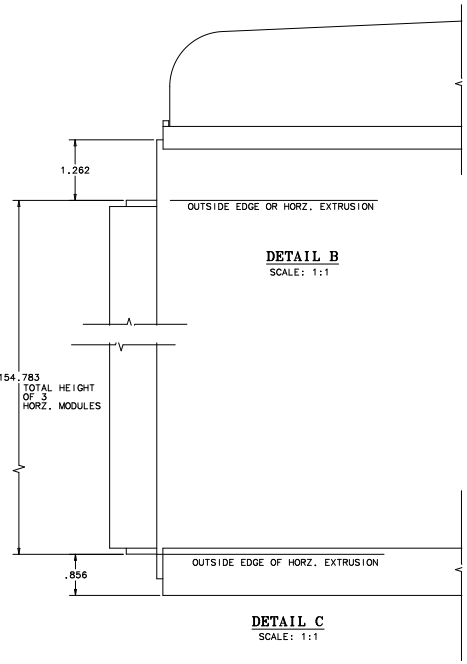

DETAIL B
SCALE: 1:1

DETAIL C
SCALE: 1:1

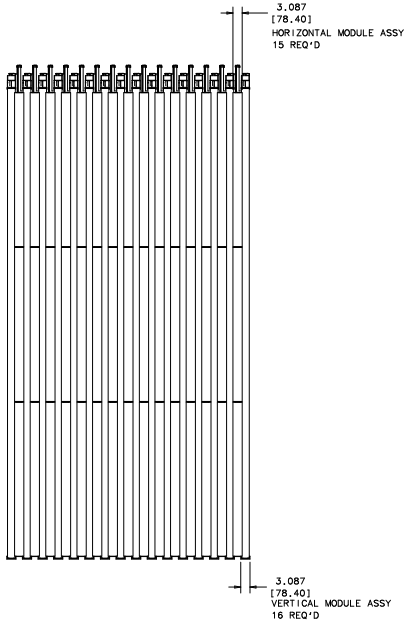

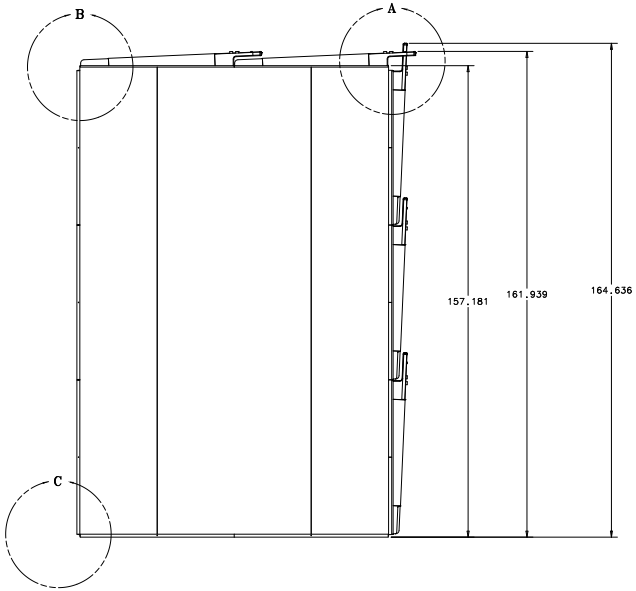

NOTES:

1. APPROXIMATE WEIGHT OF ASSEMBLY WHEN MODULES ARE EMPTY IS 7,861 LBS.

2. DEVCON PLASTIC WELDER 60 ADHESIVE

ITEM	PART NO.	DESCRIPTION OR SIZE	QTY.
2	ME-444095	HORIZONTAL MODULE ASSEMBLY	45
1	ME-444094	VERTICAL MODULE ASSEMBLY	32

PARTS LIST

UNLESS OTHERWISE SPECIFIED			ORIGINATOR	V.GUARINO	20-SEP-2007
.XX	.XXX	ANGLES	DRAWN	D.FRIEND	20-SEP-2007
± ---	± ---	± ---	CHECKED	D.FRIEND	20-SEP-2007
			APPROVED		

1. BREAK ALL SHARP EDGES 1/64
2. DO NOT SCALE DRAWING.
3. DIMENSIONS BASED UPON ASME Y14.5M-1994
4. MAX. ALL MACH. SURFACES 125
5. DRAWING UNITS: U.S.INCH

USED ON: ME-444202

MATERIAL: SEE PARTS LIST ABOVE

FERMI NATIONAL ACCELERATOR LABORATORY
UNITED STATES DEPARTMENT OF ENERGY

NOVA-DETECTOR_PROTOTYPE
IPND PVC MODULES
31 PANEL ASSY - VERTICAL BLOCK

SCALE	DRAWING NUMBER	SHEET	REV
1:10 & AS NOTED	3929.000-ME-444096	1 OF 1	

CREATED WITH : Ideas12NXSeries GROUP: PPD/MECHANICAL DEPARTMENT