REV	DESCRIPTION	DATE

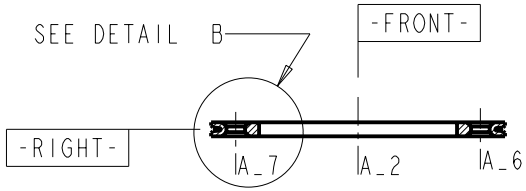

SECTION B-B (HIDDEN LINES SUPPRESSED)

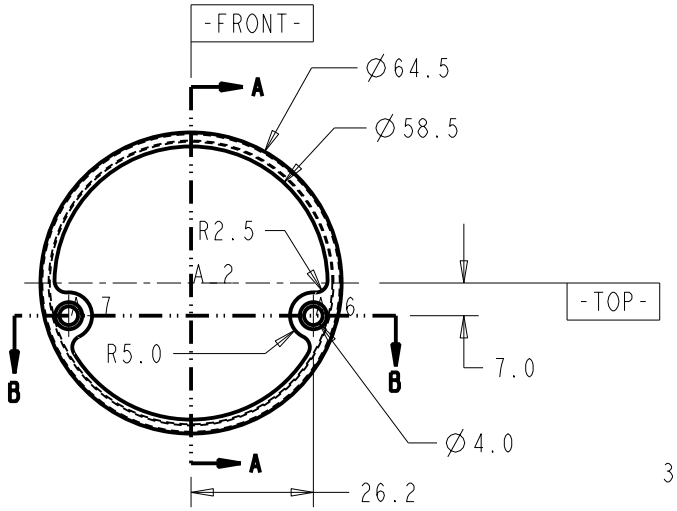

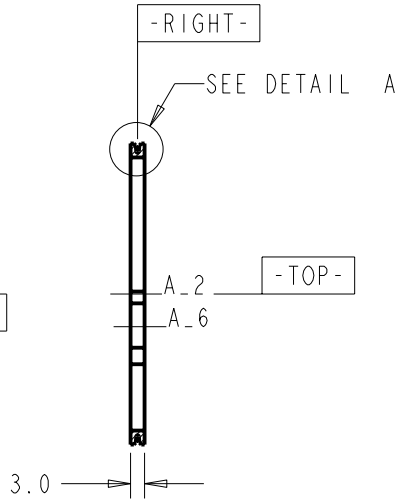

SECTION A-A
(HIDDEN LINES SUPPRESSED)

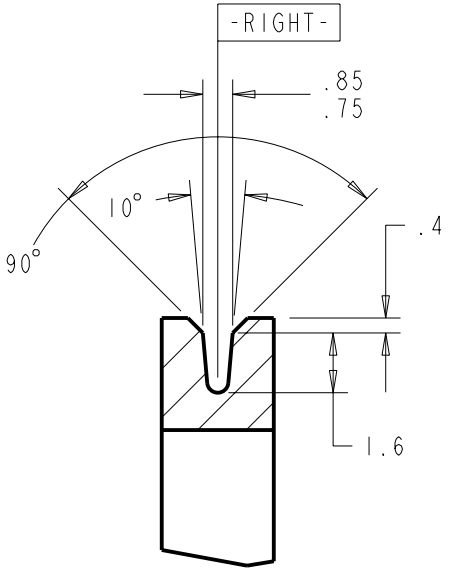

DETAIL A
SCALE 8.000
(HIDDEN LINES SUPPRESSED)

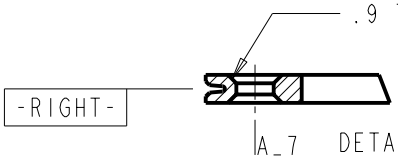

DETAIL B
SCALE 2.000
(HIDDEN LINES SUPPRESSED)

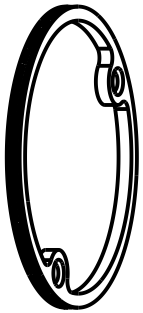

NOTES	
1	MATERIAL: TYPE I RIGID PVC, GEON M3800, BLACK
2	MATERIAL REGRIND NOT TO EXCEED SUPPLIER RECOMMENDATION
3	DO NOT USE MOLD RELEASE
4	BREAK ALL EDGES
5	QUANTITY: 1000

TOLERANCES		ORIGINATOR	A. Smith	12-Nov-08
.X	±0.1	DRAWN BY	A. Smith & T. Chase	12-Nov-08
.XX	±0.01	CHECKED		
.XXX	±0.001	APPROVED		
Angles	±0.5	USED ON: NOvA Modules		

NOvA Experiment (Fermilab E929)

UNIVERSITY OF MINNESOTA

NOvA Prototype Retainer Ring

Finish	Model Type: PART	Model File Name: NOVA_RETAINER_RING	Drawing File Name: NOVA_RETAINER_RING	
	Scale 1.000:1	Drawing Number	Revision	Sheet 1 of 2
	All dimensions are in mm unless specified otherwise			