REV	DESCRIPTION	DATE

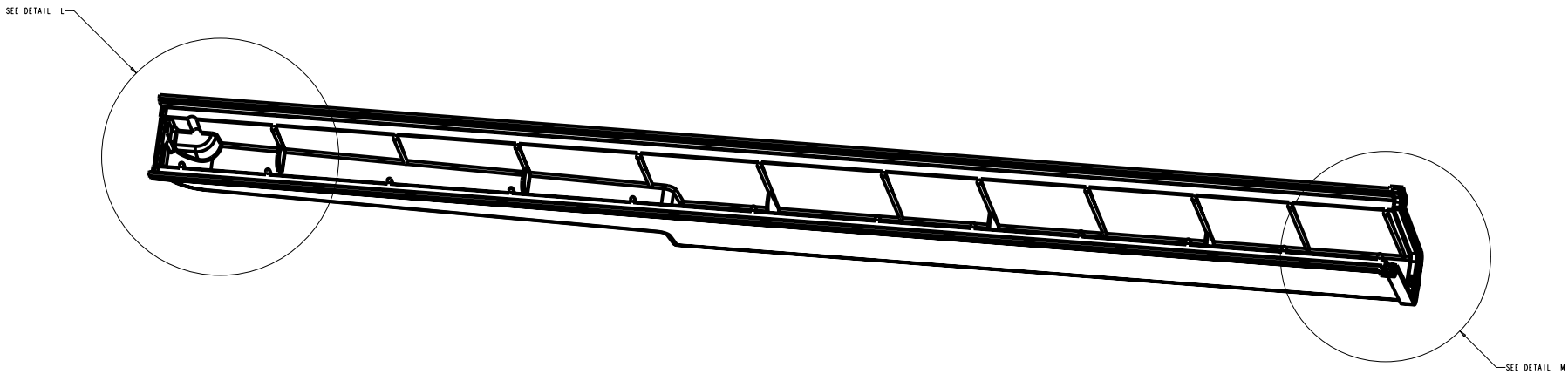

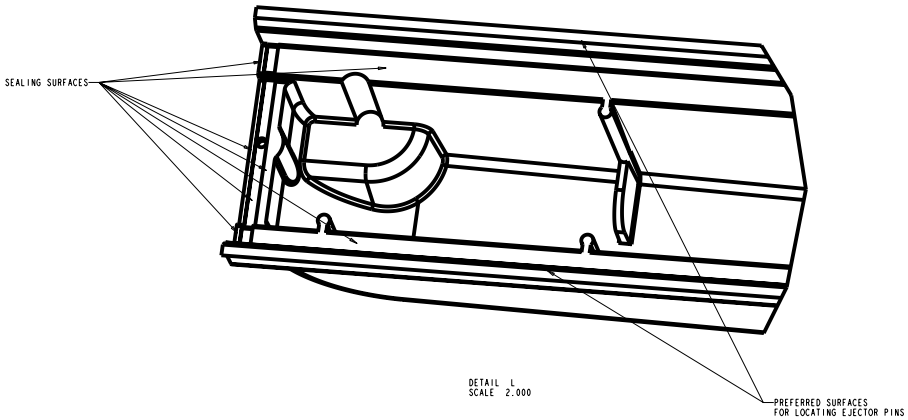

DETAIL L
SCALE 2.000

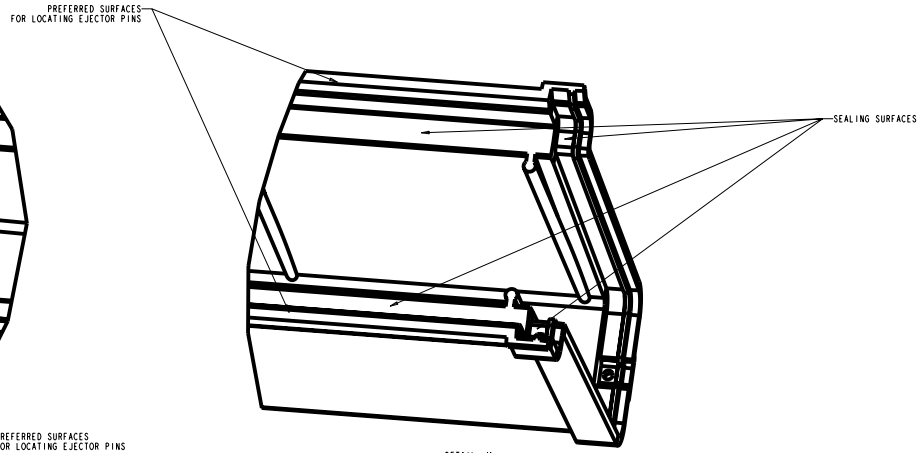

DETAIL M
SCALE 2.000

NOTES	
1	DO NOT PLACE EJECTOR PINS, SPRUES, GATES NOR RUNNERS ON SEALING SURFACES

TOLERANCES		ORIGINATOR	T. Chase	13-Mar-09
.X	±0.1	DRAWN BY	T. Chase	13-Mar-09
.XX	±0.01	CHECKED		
.XXX	±0.001	APPROVED		
ANGLES	±0.5	USED ON: NOvA Manifolds		

NOvA Experiment (Fermilab E929)

UNIVERSITY OF MINNESOTA

NOvA Manifold Cover

Model Type:	Model File Name:	Drawing File Name:
PART	NOVA_MANIF_COV_FLANGE	NOVA_MANIF_COV_FLANGE
Scale: 0.750:1	Drawing Number	Revision / Sheet 7 of 7

Finish

All dimensions are in mm unless specified otherwise