REV	DESCRIPTION	DATE

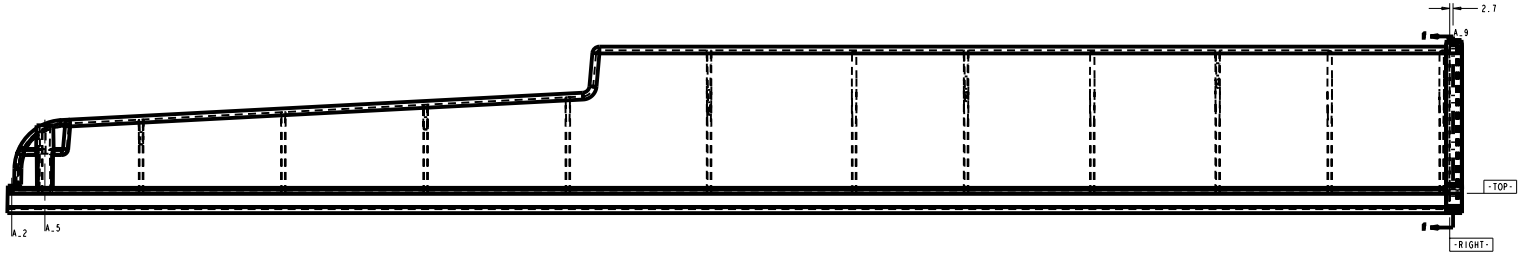

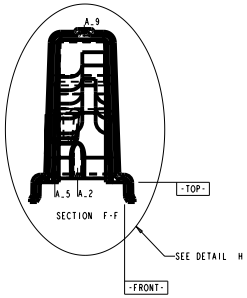

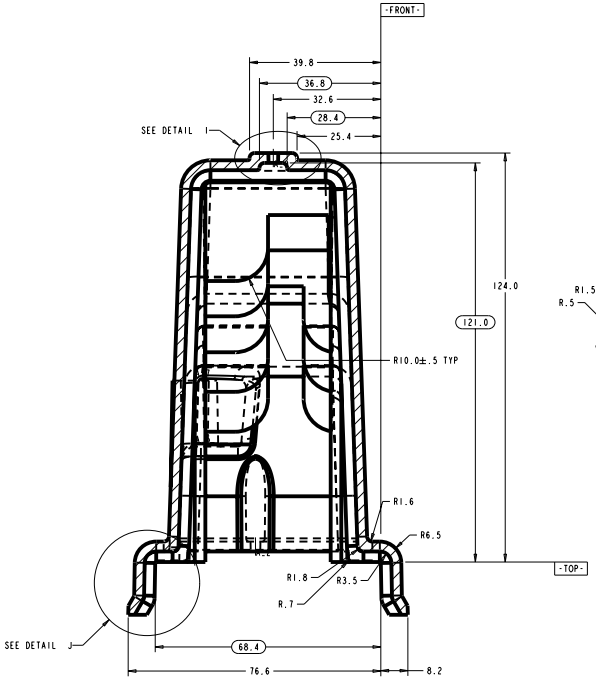

DETAIL H
SCALE 2.000

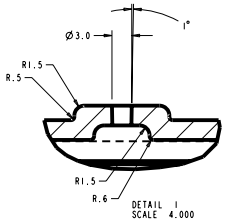

DETAIL I
SCALE 4.000

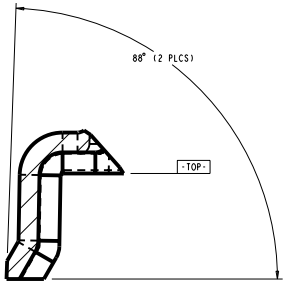

DETAIL J
SCALE 4.000

TOLERANCES		ORIGINATOR	T. Chase	09-Mar-09
.X	±0.1	DRAWN BY	T. Chase	09-Mar-09
.XX	±0.01	CHECKED		
.XXX	±0.001	APPROVED		
ANGLES	±0.5	USED ON: NOvA Manifolds		

NOvA Experiment (Fermilab E929)

UNIVERSITY OF MINNESOTA

NOvA Manifold Cover

Model Type:	Model File Name:	Drawing File Name:
PART	NOVA_MANIF_COV_FLANGE	NOVA_MANIF_COV_FLANGE
Scale: 0.750:1	Drawing Number	Revision / Sheet: 5 of 7

Finish

All dimensions are in mm unless specified otherwise