REV	DESCRIPTION	DATE

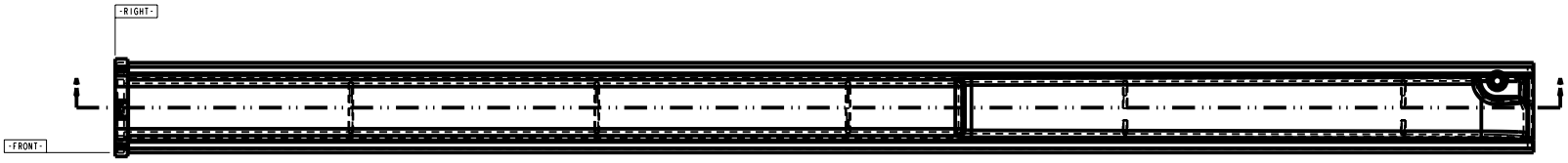

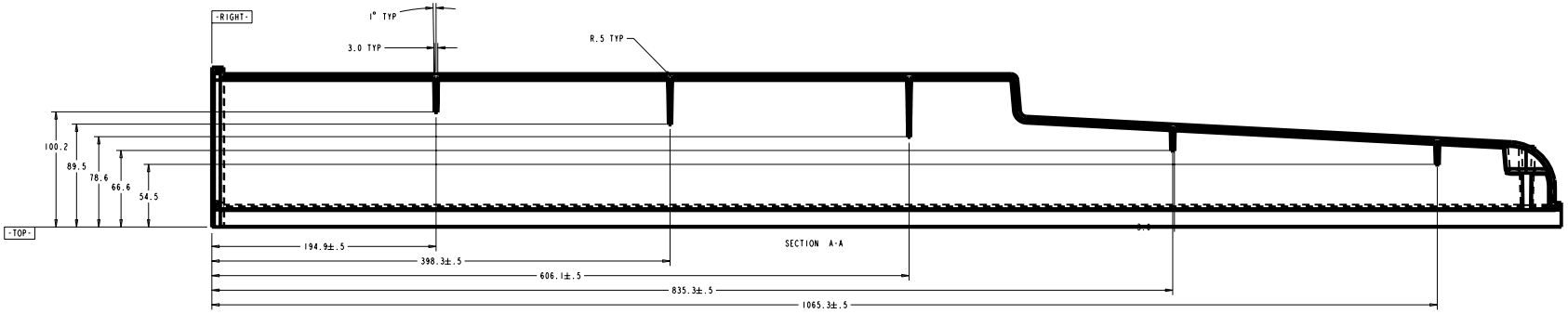

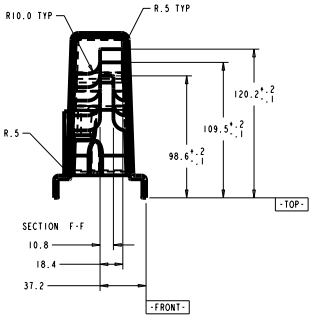

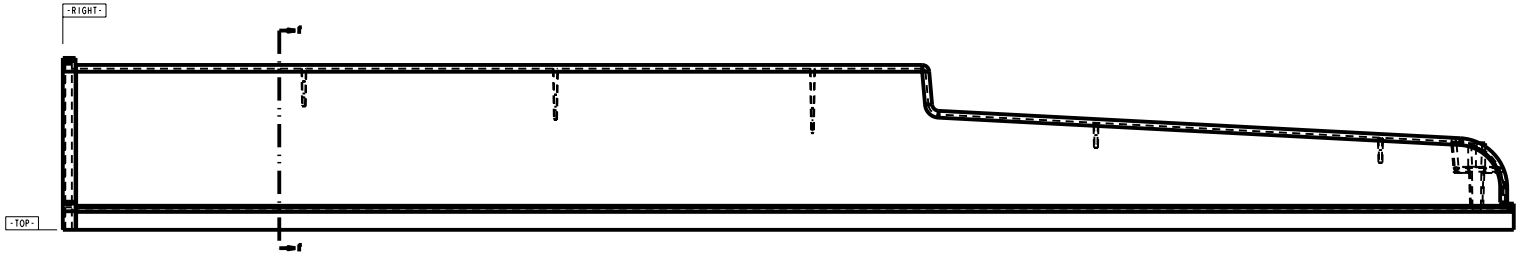

TOLERANCES		ORIGINATOR	T. Chase	26-Jan-07
.X	±0.1	DRAWN BY	T. Chase	26-Jan-07
.XX	±0.01	CHECKED		
.XXX	±0.001	APPROVED		
ANGLES	±0.5	USED ON: NOvA Manifolds		

NOvA Experiment (Fermilab E929)

UNIVERSITY OF MINNESOTA

Manifold Cover

Model Type: PART	Model File Name: NOVA_MANIF_COVER	Drawing File Name: NOVA_MANIF_COVER
Scale 0.750:1	Drawing Number	Revision / Sheet 3 of 4
Finish	All dimensions are in mm unless specified otherwise	