| REV | DESCRIPTION | DATE |
|---|---|---|

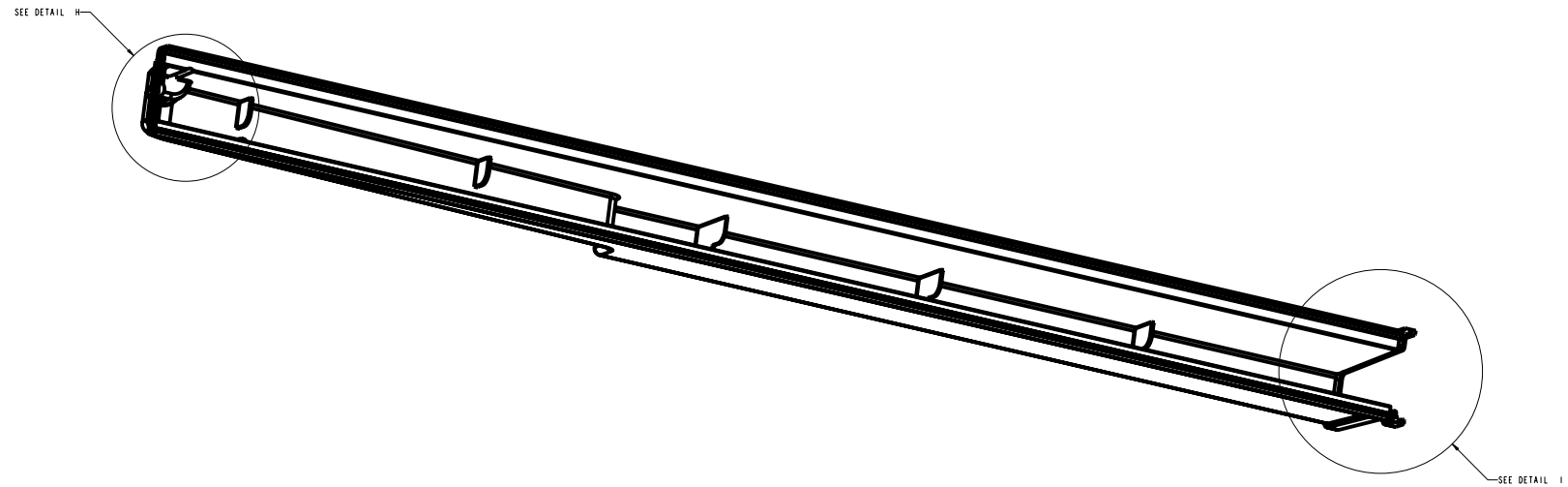


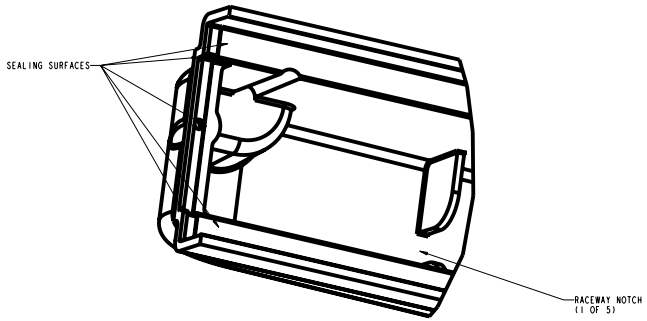


DETAIL H
SCALE 2.000

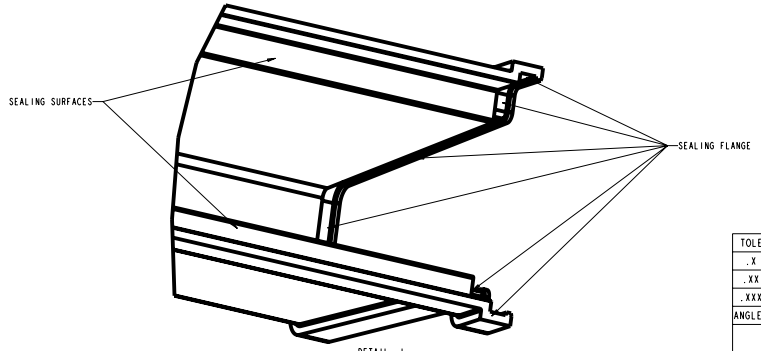


DETAIL I
SCALE 2.000

| NOTES |
|---|
| 1 DO NOT INCLUDE SPRUES, GATES NOR RUNNERS ON SEALING SURFACES OR INSIDE SURFACES OF SEALING FLANGE |

| TOLERANCES | | ORIGINATOR | T. Chase | 21-Mar-07 |
|---|---|---|---|---|
| .X | ±0.1 | DRAWN BY | T. Chase | 21-Mar-07 |
| .XX | ±0.01 | CHECKED | | |
| .XXX | ±0.001 | APPROVED | | |
| ANGLES | ±0.5 | USED ON: NOvA Manifolds | | |

**NOvA Experiment (Fermilab E929)**

UNIVERSITY OF MINNESOTA

**Manifold Cover**

| Model Type: | Model File Name: | Drawing File Name: |
|---|---|---|
| PART | NOVA_MANIF_COVER | NOVA_MANIF_COVER |
| Scale | Drawing Number | Revision / Sheet |
| 0.750:1 | | 4 of 4 |

Finish

All dimensions are in mm unless specified otherwise