REV	DESCRIPTION	DATE

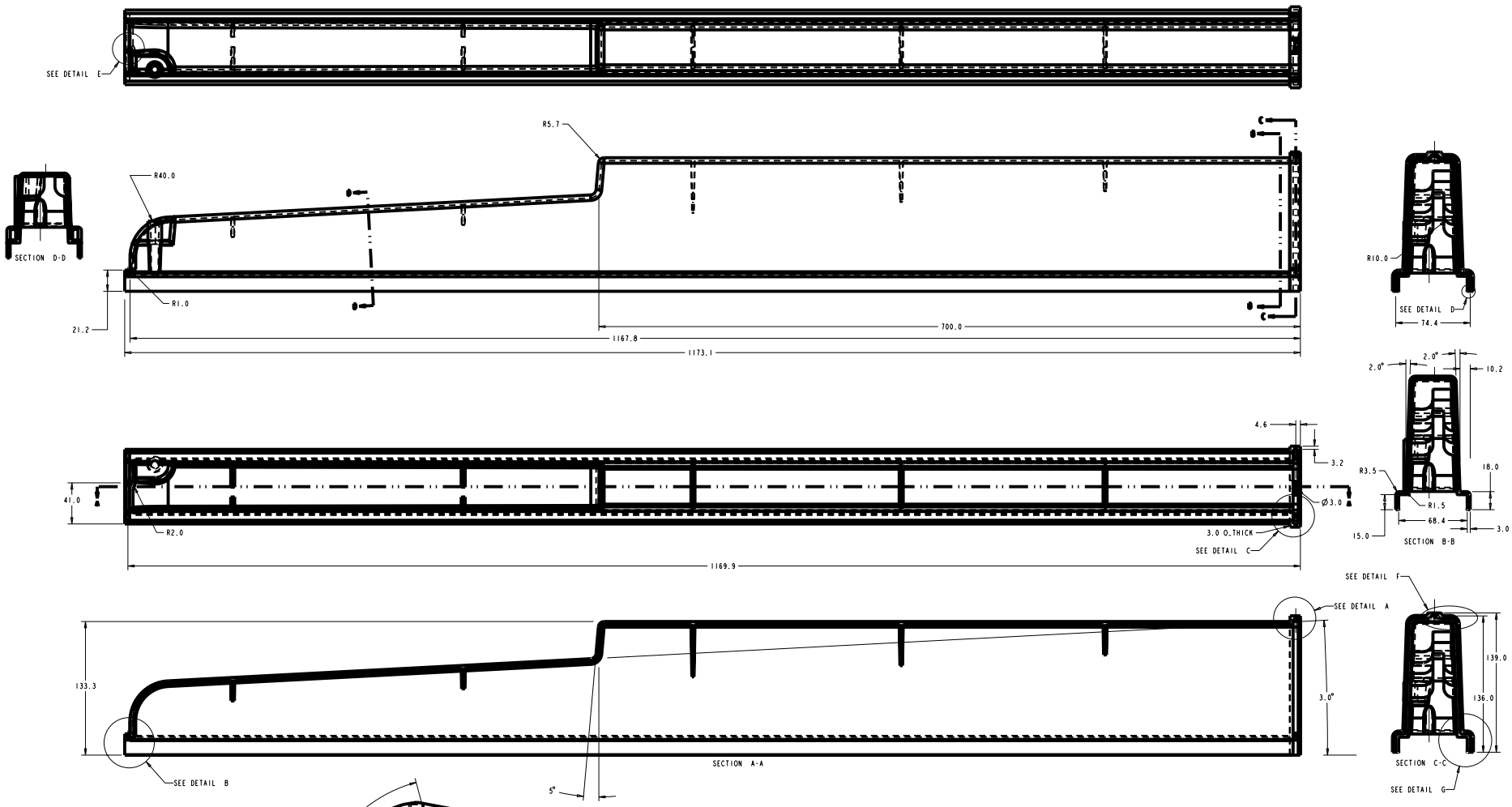

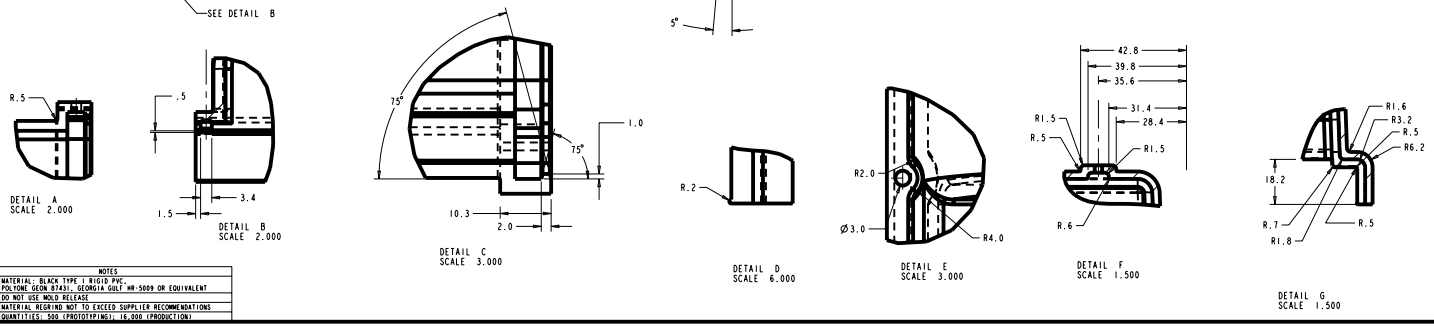

NOTES	
1	MATERIAL: BLACK TYPE I B RIGID PVC POLYONE GEON 87431, GEORGIA GULF HR-5009 OR EQUIVALENT
2	DO NOT USE MOLD RELEASE
3	MATERIAL REGRIND NOT TO EXCEED SUPPLIER RECOMMENDATIONS
3	QUANTITIES: 500 (PROTOTYPING), 16,000 (PRODUCTION)

TOLERANCES		ORIGINATOR	T. Chase	20-Dec-06
.X	±0.1	DRAWN BY	T. Chase	20-Dec-06
.XX	±0.01	CHECKED		
.XXX	±0.001	APPROVED		
ANGLES	±0.5	USED ON: NOvA Manifolds		

NOvA Experiment (Fermilab E929)

UNIVERSITY OF MINNESOTA

Manifold Cover

Model Type: PART	Model File Name: NOVA_MANIF_COVER	Drawing File Name: NOVA_MANIF_COVER
Scale 0.750:1	Drawing Number	Revision / Sheet 1 of 4

Finish

All dimensions are in mm unless specified otherwise