REV	DESCRIPTION	DRAWN	DATE
		APPROVED	DATE
A	UPDATED ITEM #3 TO ITS CURRENT REVISION, ITEMS #1 & 2 MATERIAL WAS A36 STEEL. WGHT WAS 2,448 LBS. CHG'D ALL WELDS FROM 1/4 & ADDED ELECTRODE.	D.FRIEND	21-APR-2010
		E.VILLEGAS	29-APR-2010

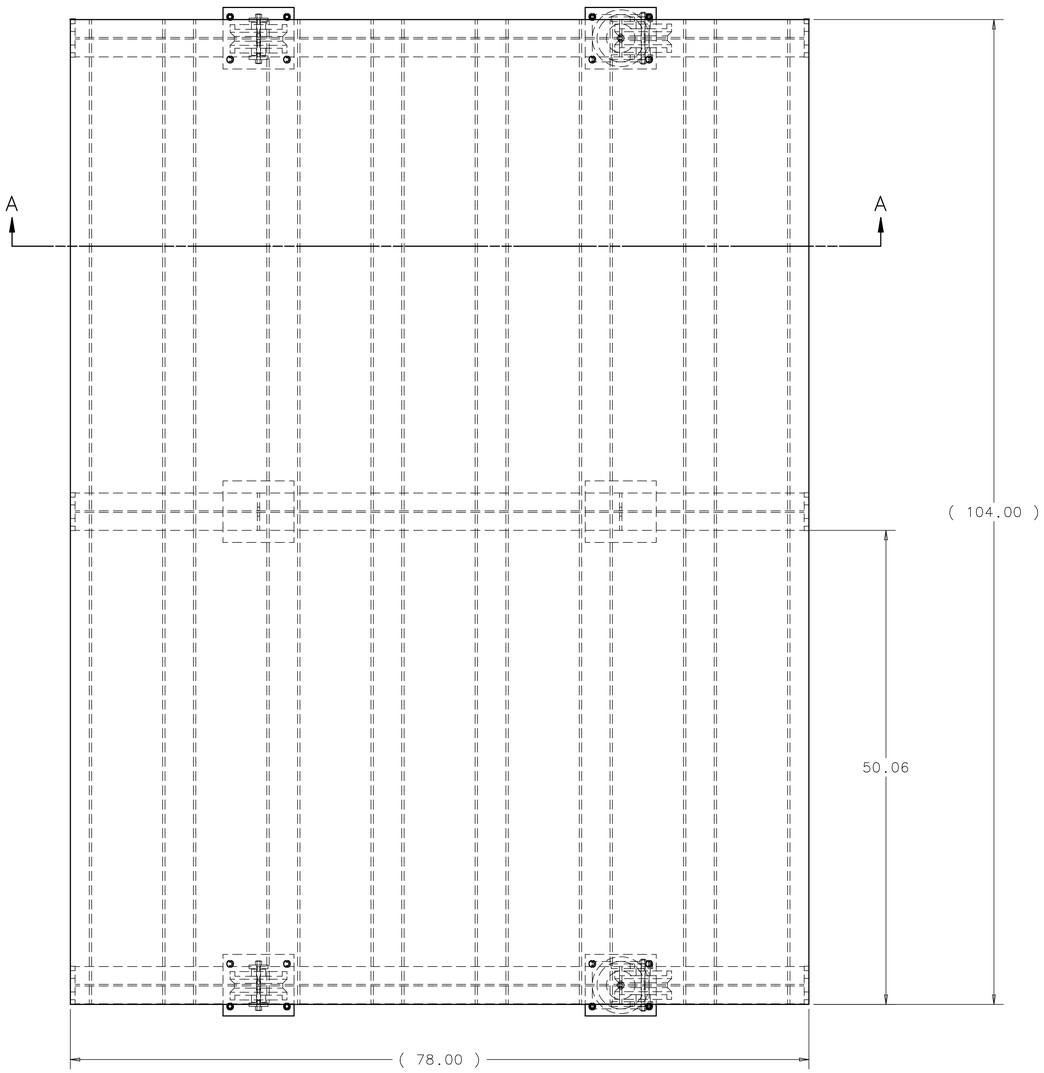

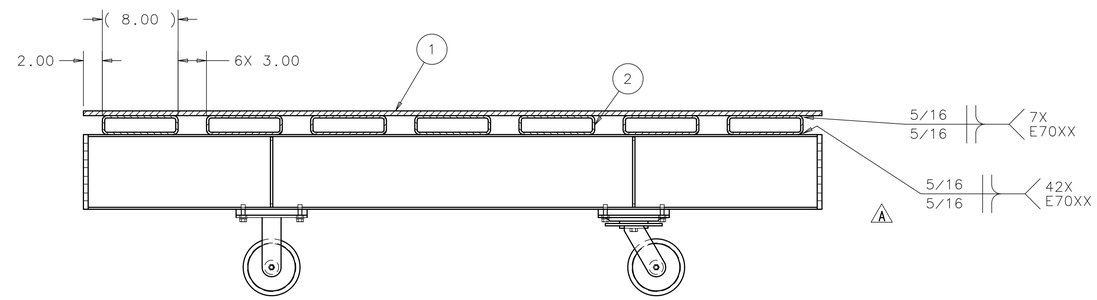

SECTION A-A

1. AFTER ALL WELDING IS COMPLETE, PAINT ASSEMBLY WITH 1 COAT OF RUST INHIBITOR PRIMER, RED IN COLOR AND 2 COATS OF A HI-GLOSS PAINT, SAFETY BLUE IN COLOR.

A 2. APPROXIMATE WEIGHT OF ASSEMBLY IS 2,469 LBS.

TO BE PROVIDED AND INSTALLED BY FERMILAB

ITEM	PART NO.	DESCRIPTION OR SIZE	QTY.
9	MD-444629	BTTM CART HORZ MID SPPRT WELDMNT	1
8	COML	THREAD LOCKER, RED IN COLOR LOCKTITE 2260, ITEM #32525	AS REQ'D
7	MCMASTER CARR #2453T21	CASTER, V-GROOVE WHEEL, ZINC PLATED STL 6000# CAP, 8-1/2" HIGH, ø6" WHEEL, SWIVEL	2
6	COML	WASHER, LOCK, PLAIN, STEEL 7/16 SCREW	16
5	COML	SCREW, CAP, HEX HD, ZINC PLATED STEEL GRADE 5, 7/16-14 UNC X 1.50 LG	16
4	MCMASTER CARR #2453T24	CASTER, V-GROOVE WHEEL, ZINC PLATED STL 6000# CAP, 8-1/2" HIGH, ø6" WHEEL, RIGID	2
3	MD-444630	BOTTOM CART HORIZ SPPRT WELDMENT	2
2	COML	TUBE STEEL, 8 X 2 X 1/4 X 104.00 ASTM A500 GRADE B STEEL	7
1	COML	PLATE 1/2" X 78.00 X 104.00 ASTM A992 STEEL	1

A

PARTS LIST

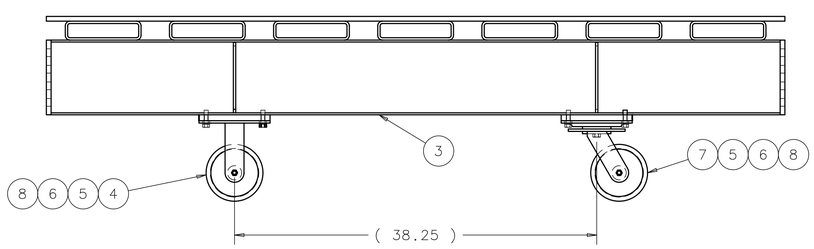

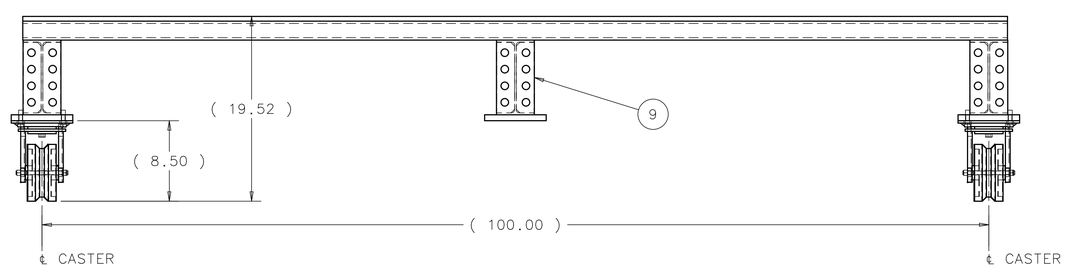

UNLESS OTHERWISE SPECIFIED			ORIGINATOR	V.GUARINO	10-MAY-2007
.XX	.XXX	ANGLES	DRAWN	D.FRIEND	10-MAY-2007
± .06	± ---	± 1°	CHECKED	G.SMITH	11-MAY-2007
			APPROVED	V.GUARINO	31-JUL-2007

1. BREAK ALL SHARP EDGES .015 MAX.
2. DO NOT SCALE DRAWING.
3. DIMENSIONS BASED UPON ASME Y14.5M-1994
4. MAX. ALL MACH. SURFACES 125
5. DRAWING UNITS: U.S. INCH

USED ON: ME-444633

MATERIAL: SEE PARTS LIST ABOVE

FERMI NATIONAL ACCELERATOR LABORATORY
UNITED STATES DEPARTMENT OF ENERGY

NOVA-DETECTOR_PROTOTYPE IPND LIFTING FIXTURE HORZ BLOCK LIFTING FIXTURE BASE WELDMENT

SCALE	DRAWING NUMBER	SHEET	REV
1:8	3929.000-MD-444632	1 OF 1	A

CREATED WITH : Ideas12NXSeries | GROUP: PPD/MECHANICAL DEPARTMENT