REV	DESCRIPTION	DRAWN / APPROVED	DATE / DATE
A	UPDATED ITEM #2 TO ITS CURRENT MODULE THICKNESS DUE TO GLUE GAP THKNSS CHANGE	D.FRIEND	28-SEP-2007
		----------	17-DEC-2008
B	SNOUT ORIENTATION CHANGED,NOW VERTICAL PLANE FACING COUNTER CLOCKWISE	G SMITH	17-DEC-2008
		G SMITH	17-DEC-2008
C	ROTATED HORZ. PANELS UPWARDS .1432" (2.5 M.RAD)	D.FRIEND	21-MAR-2009
		P.LUKENS	08-JUL-2009
D	CHANGED HORIZ. PLANES ROTATION FROM PLANULAR TO INDIVIDUAL ROTATION. CHG'D WEIGHT. UPDATED MANIFOLDS/SNOUTS	S.KINDELBERGER	22-SEP-2009
		D.FRIEND	08-OCT-2009
E	UPDATED ITEM #2 TO ITS CURRENT REVISION. STATE AND SUPPRESSED INTERNAL PLANES AND LIFTING FIXTURE WHEELS. ADDED NOTE 1, C.G. AND ASSOC'D DIMS NOTE 1 WAS 18,445 LBS.	D.FRIEND	21-APR-2010
		E.VILLEGAS	29-APR-2010

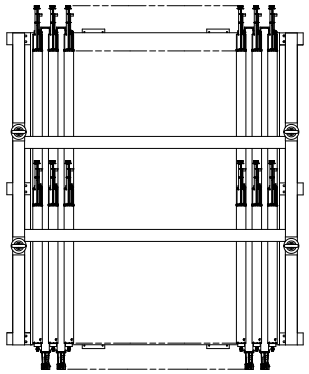

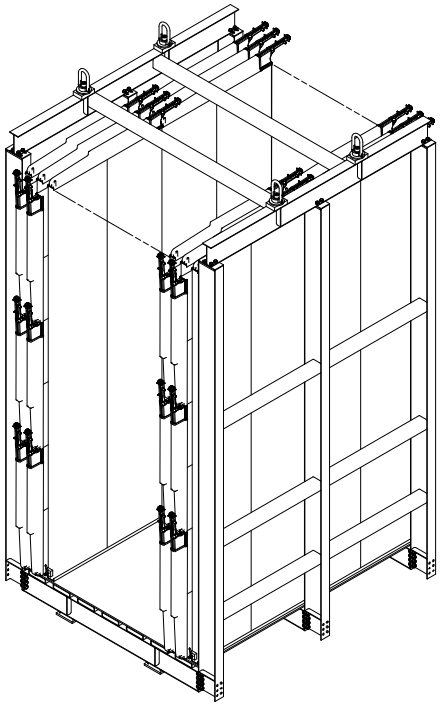

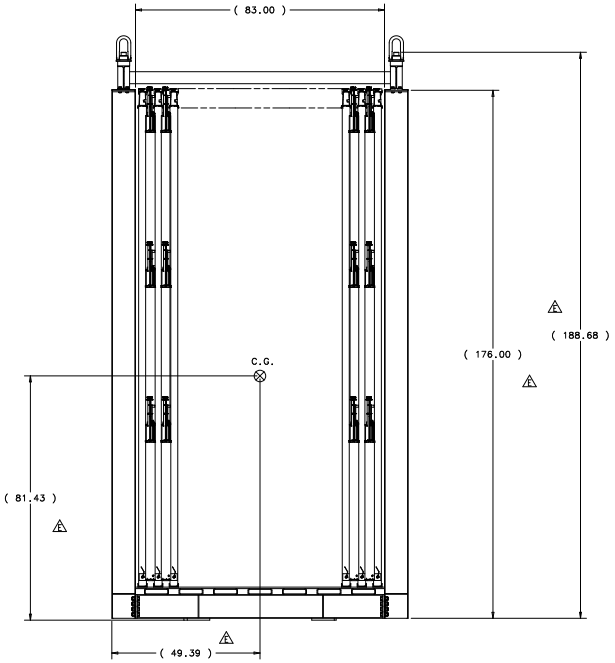

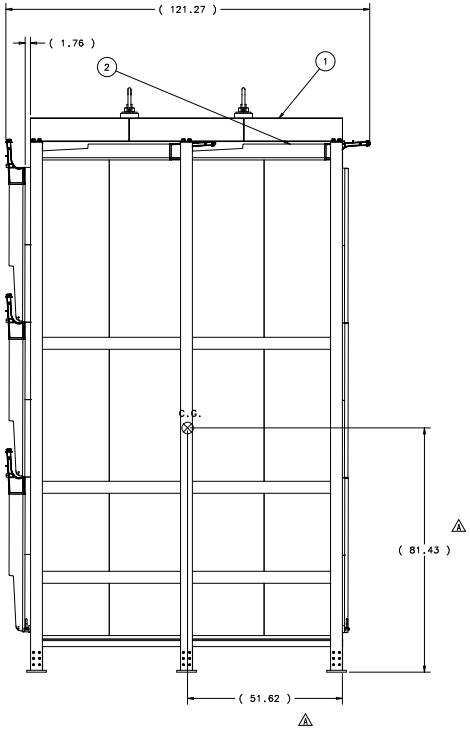

NOTES:

1. APPROXIMATE WEIGHT OF ASSEMBLY IS 18,400 LBS.
2. ASSEMBLY SHALL ONLY BE LIFTED AND MOVED WHEN MODULE BLOCK (ITEM #2) IS EMPTY OF ALL FLUID.
3. ITEM #2'S INTERNAL PLANES NOT SHOWN FOR CLARITY.

ITEM	PART NO.	DESCRIPTION OR SIZE	QTY.
2	ME-444096	31 EXTRUSION PANEL ASSEMBLY	1
1	ME-444201	LIFTING FIXTURE AND CART ASSY	1

PARTS LIST

UNLESS OTHERWISE SPECIFIED					
.XX	.XX	ANGLES	ORIGINATOR	V.GUARINO	18-JUL-2007
± ---	± ---	± ---	DRAWN	D.FRIEND	18-JUL-2007
			CHECKED	G.SMITH	25-JUL-2007
			APPROVED	V.GUARINO	31-JUL-2007

1. BREAK ALL SHARP EDGES MAX.
2. DO NOT SCALE DRAWING.
3. DIMENSIONS BASED UPON ASME Y14.5M-1994
4. MAX. ALL MACH. SURFACES
5. DRAWING UNITS:U.S.INCH

USED ON

MATERIAL: SEE PARTS LIST ABOVE

FERMI NATIONAL ACCELERATOR LABORATORY
UNITED STATES DEPARTMENT OF ENERGY

NOVA-DETECTOR_PROTOTYPE
IPND LIFTING FIXTURE AND CART
BLOCK ASSY AND LIFTING FIXT ASSY

SCALE	DRAWING NUMBER	SHEET	REV
1:16	3929.000-ME-444202	1 OF 1	E

CREATED WITH : Ideas12NXSeries | GROUP: PPD/MECHANICAL DEPARTMENT