REV	DESCRIPTION	DRAWN	DATE
		APPROVED	DATE
A	CHG'D ALL WELDS FROM 1/4 & ADDED ELECTRODE, REMOVED 1/4 SQUARE WELD IN AREA A8. CHG'D ITEM #2'S MATERIAL FROM A36	D.FRIEND	20-APR-210
		E.VILLEGAS	29-APR-210

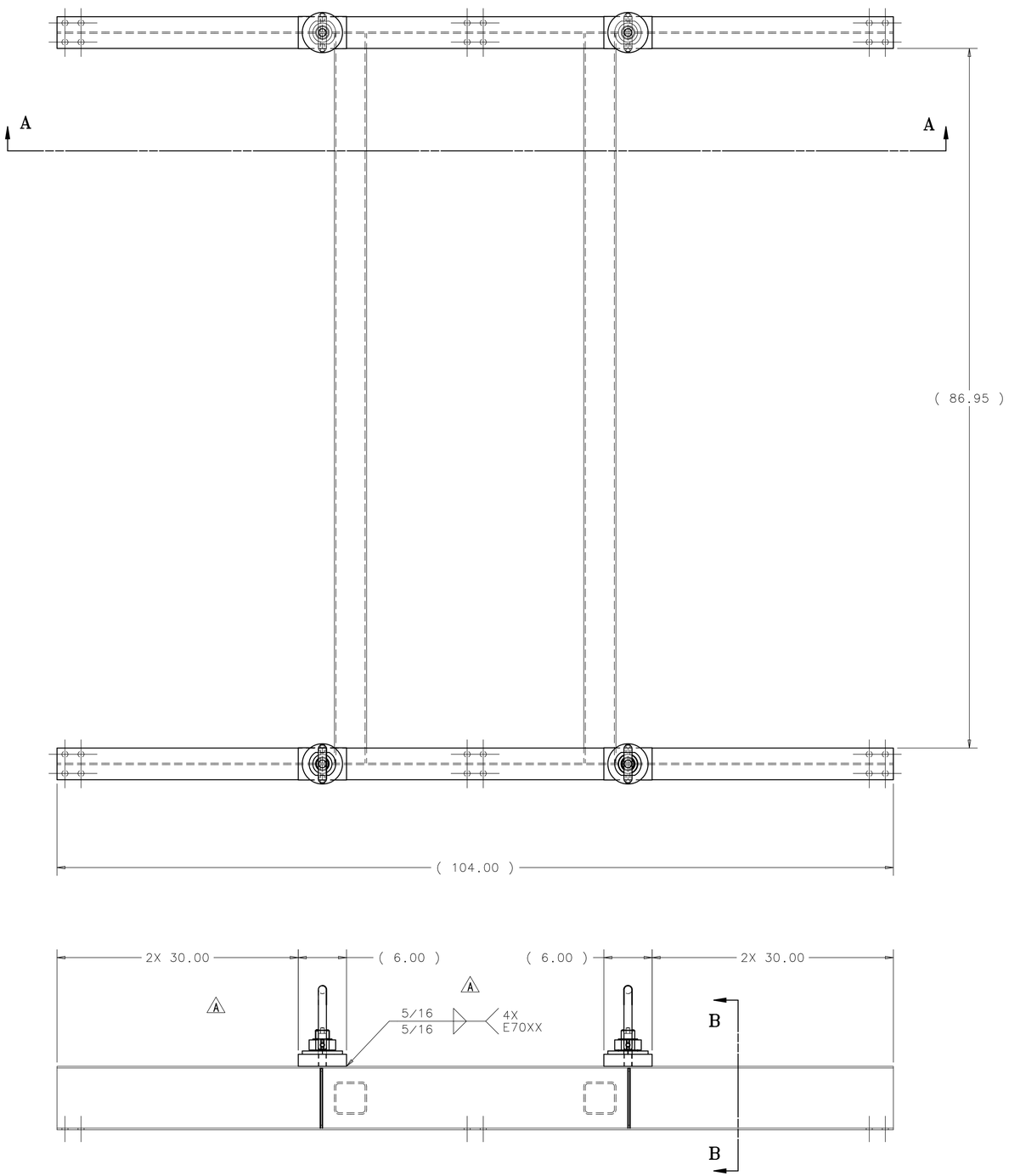

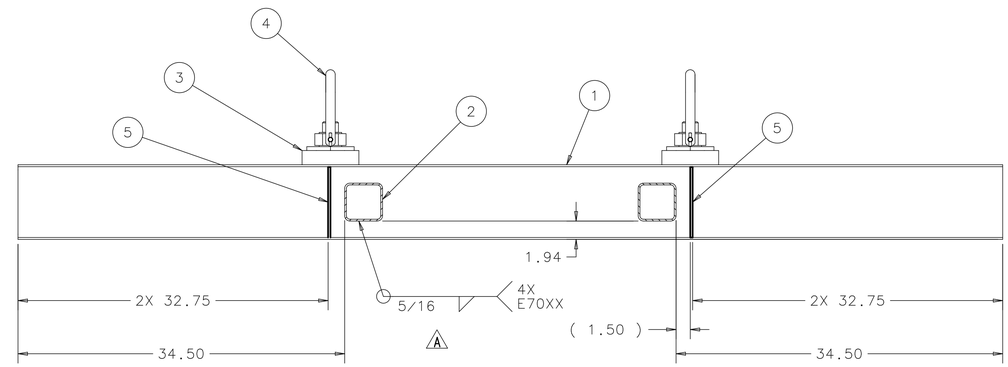

SECTION A-A
TYP. BOTH ENDS

NOTES:

1. AFTER ALL WELDING IS COMPLETE, PAINT ASSEMBLY WITH 1 COAT OF RUST INHIBITOR PRIMER, RED IN COLOR AND 2 COATS OF A HI-GLOSS PAINT, SAFETY BLUE IN COLOR.
2. APPROXIMATE WEIGHT OF ASSEMBLY IS 382 LBS.

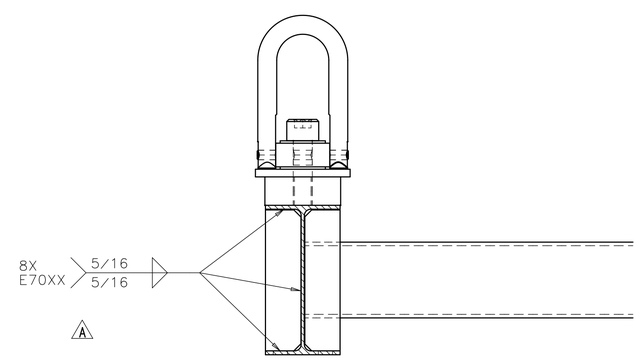

SECTION B-B
SCALE: 1:4

ITEM	PART NO.	DESCRIPTION OR SIZE	QTY.
5	MB-444195	BOTTOM SUPPORT STIFFENER	8
4	MCMASTER CARR #3070T54	HOIST RING, SWIVEL, 10,000# CAP ALLOY STEEL, 1-8 UNC	4
3	MB-444396	LIFTING RING MOUNTING PAD	4
2	COML	TUBE STEEL 4 X 4 X 1/4 X 90.72 LG. ASTM A500 GRADE B STEEL	2
1	MD-444524	TOP HORIZONTAL LIFTING SUPPORT	2

PARTS LIST

UNLESS OTHERWISE SPECIFIED					
.XX	.XXX	ANGLES	ORIGINATOR	V.GUARINO	26-JUN-2007
± .06	± ---	± ---	DRAWN	D.FRIEND	26-JUN-2007
			CHECKED	G.SMITH	25-JUL-2007
			APPROVED	V.GUARINO	31-JUL-2007

1. BREAK ALL SHARP EDGES .015 MAX.
2. DO NOT SCALE DRAWING.
3. DIMENSIONS BASED UPON ASME Y14.5M-1994
4. MAX. ALL MACH. SURFACES 125
5. DRAWING UNITS: U.S. INCH

USED ON: ME-444201

MATERIAL: SEE PARTS LIST ABOVE

FERMI NATIONAL ACCELERATOR LABORATORY
UNITED STATES DEPARTMENT OF ENERGY

NOVA-DETECTOR_PROTOTYPE IPND LIFTING FIXTURE TOP HORIZONTAL SUPPORT WELDMENT

SCALE	DRAWING NUMBER	SHEET	REV
1:8	3929.000-MD-444199	1 OF 1	A

CREATED WITH : Ideas12NXSeries | GROUP: PPD/MECHANICAL DEPARTMENT