REV	DESCRIPTION	DRAWN	DATE
		APPROVED	DATE
A	UPDATED ITEM #3 TO ITS CURRENT REVISION. ADDED REF NOTES IN TOP VIEW & REF DIMS IN SECTION A-A CHG'D ALL WELDS FROM 1/4 & ADDED ELECTRODE. ADDED SECTION C-C ADDED ITEM #5. ITEM #2 WAS A36	D.FRIEND	27-APR-2010
		E.VILLEGAS	29-APR-2010

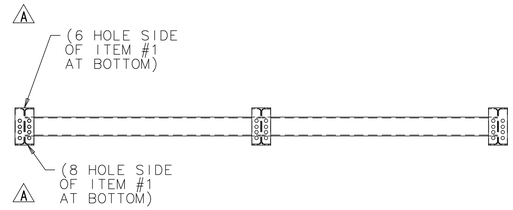

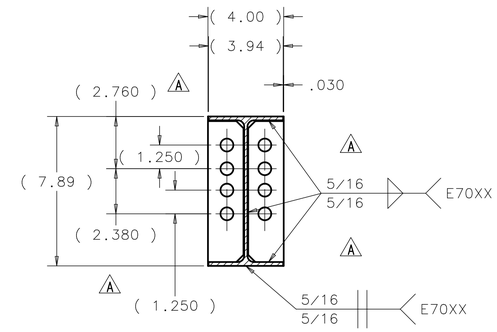

SECTION A-A

TYP. 3 PLACES
SCALE: 1/4

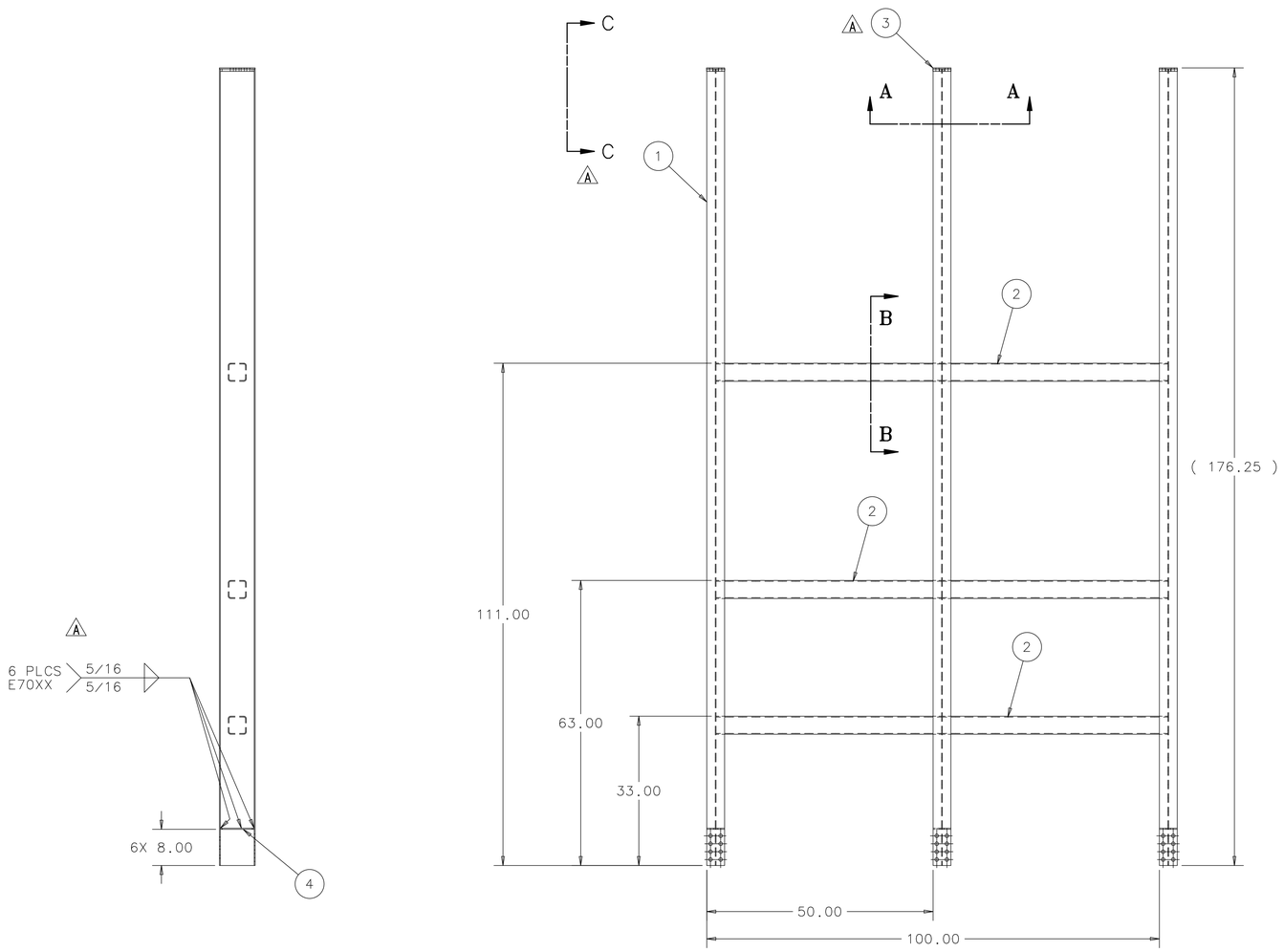

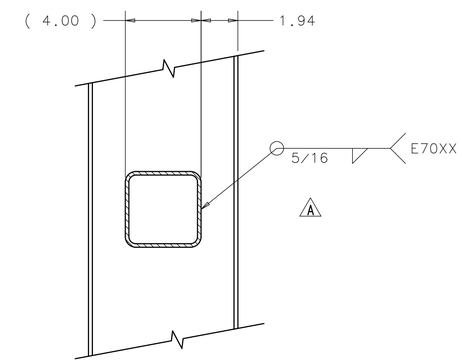

SECTION B-B

TYP. 12 PLACES
SCALE: 1/4

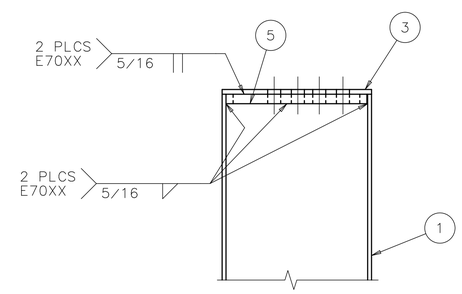

SECTION C-C

TYP. 3 PLACES
SCALE: 1/4

ITEM	PART NO.	DESCRIPTION OR SIZE	QTY.
5	MB-466878	END PLATE STIFFENER	6
4	MB-444195	BOTTOM SUPPORT STIFFENER	6
3	MB-444506	VERTICAL SUPPORT MOUNTING PLATE	3
2	COML	TUBE STEEL, 4 X 4 X 1/4 X 49.830 LG. ASTM A500 GRADE B STEEL	6
1	MC-444196	VERTICAL SUPPORT	3

PARTS LIST

UNLESS OTHERWISE SPECIFIED			ORIGINATOR	V.GUARINO	18-JUL-2007
.XX	.XXX	ANGLES	DRAWN	D.FRIEND	18-JUL-2007
± .06	± .030	± 1°	CHECKED	G.SMITH	25-JUL-2007
			APPROVED	V.GUARINO	31-JUL-2007

1. BREAK ALL SHARP EDGES .015 MAX.
2. DO NOT SCALE DRAWING.
3. DIMENSIONS BASED UPON ASME Y14.5M-1994
4. MAX. ALL MACH. SURFACES 125
5. DRAWING UNITS: U.S. INCH

USED ON: ME-444201

MATERIAL: SEE PARTS LIST ABOVE

FERMI NATIONAL ACCELERATOR LABORATORY
UNITED STATES DEPARTMENT OF ENERGY

NOVA-DETECTOR_PROTOTYPE IPND LIFTING FIXTURE VERTICAL SUPPORT WELDMENT

SCALE	DRAWING NUMBER	SHEET	REV
1:16	3929.000-MD-444198	1 OF 1	A

CREATED WITH : Ideas12NXSeries | GROUP: PPD/MECHANICAL DEPARTMENT

2. APPROXIMATE WEIGHT OF ASSEMBLY IS 697 LBS.
1. AFTER ALL WELDING IS COMPLETE PAINT ASSEMBLY WITH 1 COAT OF RUST INHIBITOR PRIMER, RED IN COLOR AND 2 COATS OF A HI-GLOSS PAINT, SAFETY BLUE IN COLOR.

NOTES: