REV	DESCRIPTION	DRAWN / APPROVED	DATE
A	UPDATED ITEM #2 TO ITS CURRENT MODULE THICKNESS DUE TO GLUE GAP THKNSS CHANGE	D.FRIEND	01-OCT-2007
		--------	05-JAN-2009
B	UPDATED PICTORAL CHANGES VERTICAL PANEL SNOUTS SHOWN FACING TO THE LEFT	G SMITH	05-JAN-2009
		G SMITH	05-JAN-2009
C	ROTATED HORZ. PANELS UPWARDS .1432° (2.5 M.RAD)	D.FRIEND	21-MAR-2009
		P.LUKENS	08-JUL-2009
D	CHANGED HORIZ., PLANES ROTATION FROM A PLANULAR TO INDIVIDUAL ROTATION. CHG'D WEIGHT. UPDATED MANIFOLDS/SNOUTS.	S.KINDELBERGER	22-SEP-2009
		D.FRIEND	08-OCT-2009
E	SUPPRESS WHEELS AND CHG'D ASSOC'D DIMS. ADDED C.G. AND ASSOC'D DIMS. ADDED NOTE 3. CHG'D NOTE 1 FROM 18,290 LBS.	D.FRIEND	10-MAR-2010

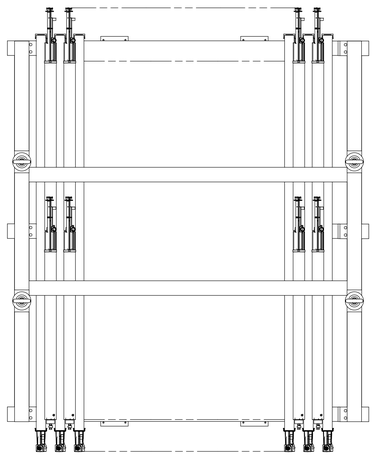

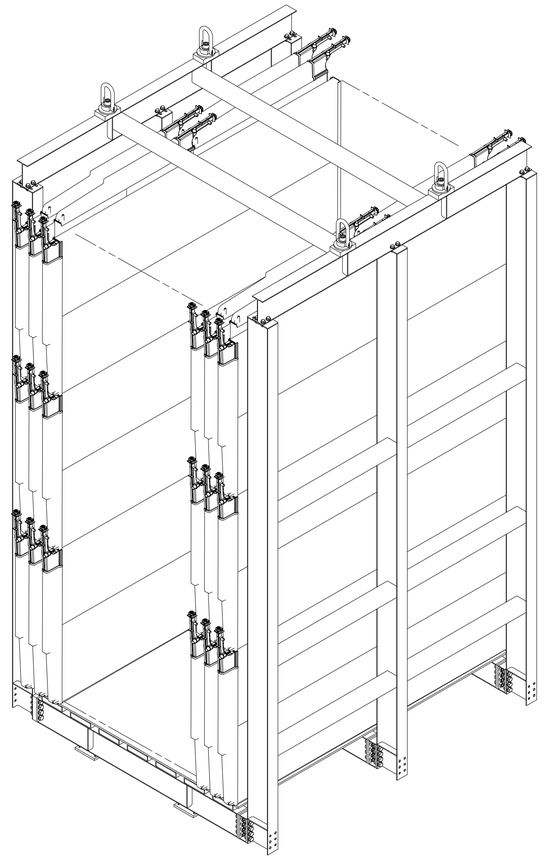

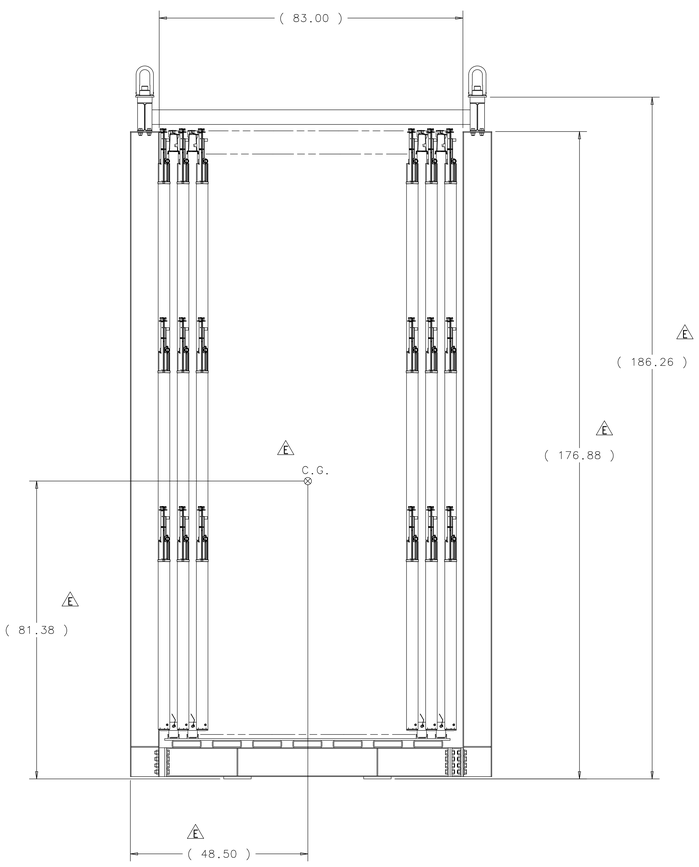

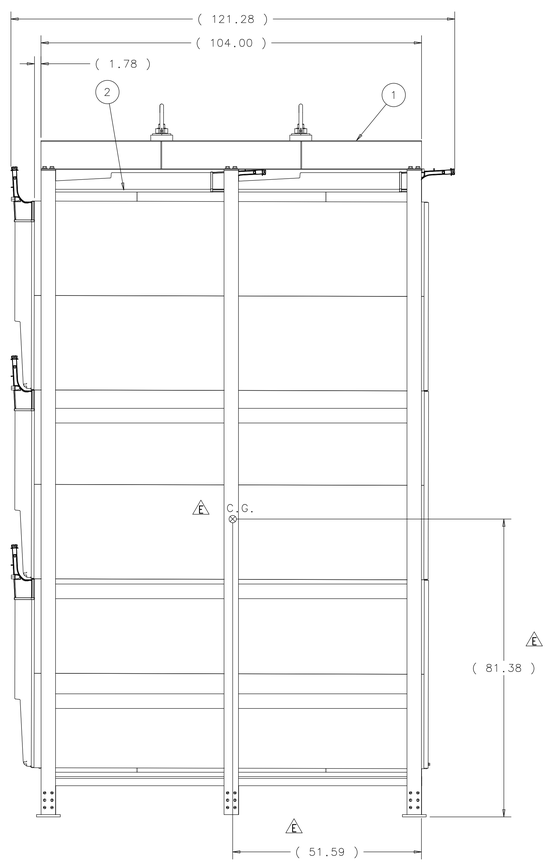

NOTES:

1. APPROXIMATE WEIGHT OF ASSEMBLY IS 18,217 LBS.
2. ASSEMBLY SHALL ONLY BE LIFTED AND MOVED WHEN MODULE BLOCK (ITEM #2) IS EMPTY OF ALL FLUID.
3. ITEM #2'S INTERNAL VERTICAL PLANES NOT SHOWN FOR CLARITY.

ITEM	PART NO.	DESCRIPTION OR SIZE	QTY.
2	ME-444583	31 EXTRUSION PANEL HORZ. ASSY	1
1	ME-444633	LIFTING FIXTURE AND CART ASSY	1

PARTS LIST

UNLESS OTHERWISE SPECIFIED			ORIGINATOR	V.GUARINO	19-JUL-2007
.XX	.XXX	ANGLES	DRAWN	D.FRIEND	19-JUL-2007
± ---	± ---	± ---	CHECKED	G.SMITH	25-JUL-2007
			APPROVED	V.GUARINO	31-JUL-2007

1. BREAK ALL SHARP EDGES --- MAX.
2. DO NOT SCALE DRAWING.
3. DIMENSIONS BASED UPON ASME Y14.5M-1994
4. MAX. ALL MACH. SURFACES
5. DRAWING UNITS: U.S. INCH

USED ON

MATERIAL: SEE PARTS LIST ABOVE

FERMI NATIONAL ACCELERATOR LABORATORY
UNITED STATES DEPARTMENT OF ENERGY

NOVA-DETECTOR_PROTOTYPE IPND LIFTING FIXTURE HORZ BLOCK BLOCK ASSY AND LIFTING FIXT ASSY

SCALE	DRAWING NUMBER	SHEET	REV
1:16	3929.000-ME-444635	1 OF 1	E

CREATED WITH : Ideas12NXSeries GROUP: PPD/MECHANICAL DEPARTMENT