REV	DESCRIPTION	DRAWN	DATE
		APPROVED	DATE

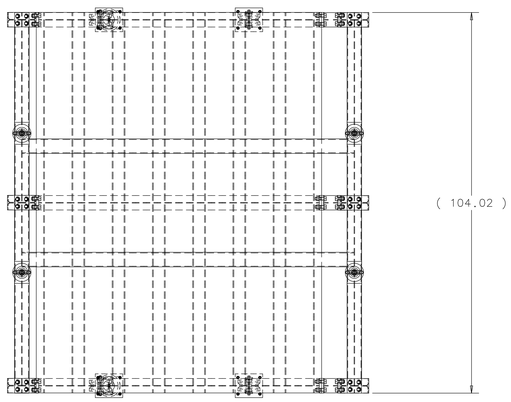

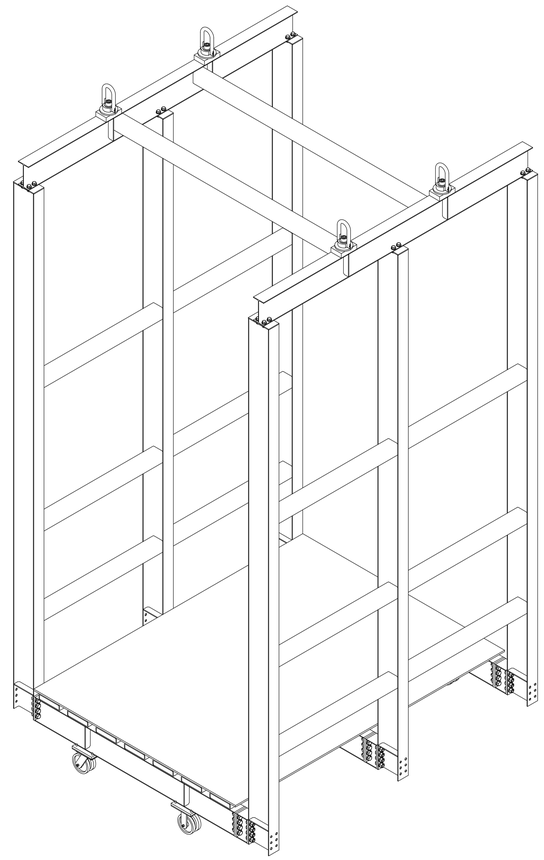

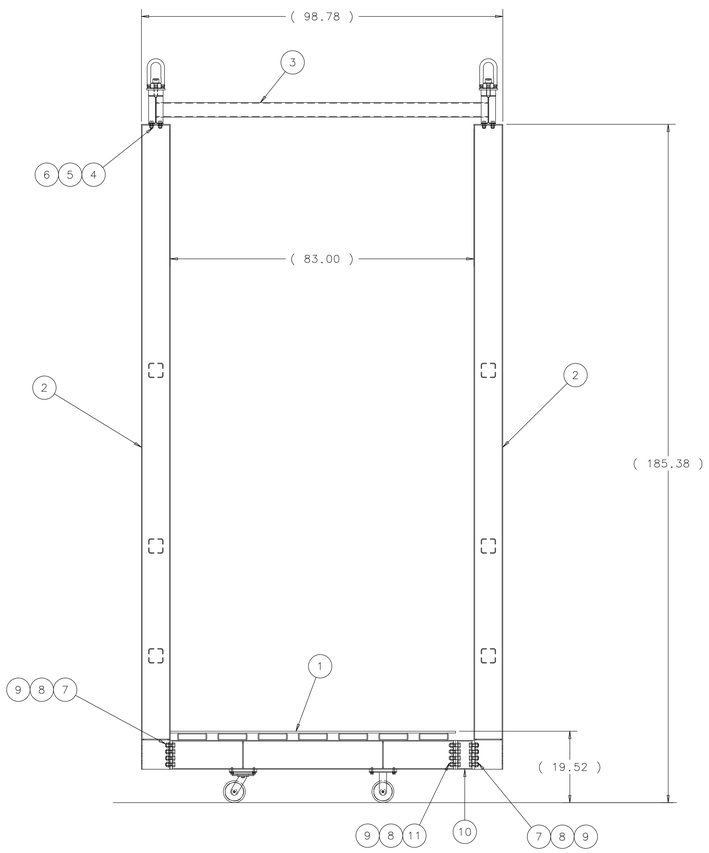

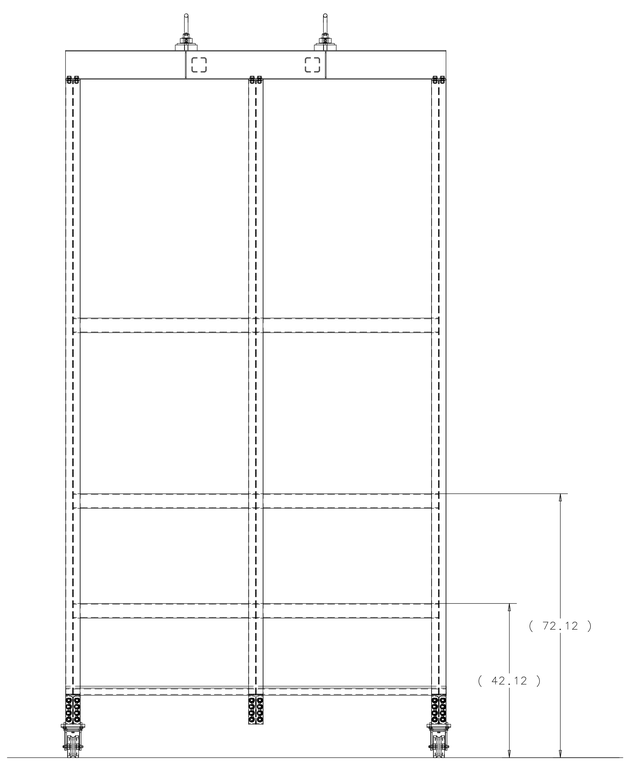

NOTES:

1. APPROXIMATE WEIGHT OF ASSEMBLY IS 4,301 LBS.

ITEM	PART NO.	DESCRIPTION OR SIZE	QTY.
11	COML	SCREW, HEX HD, GRADE 5, ALLOY STEEL 3/4-10 UNC X 2.50" LG.	24
10	MC-444631	LIFTING FIXTURE SPACER WELDMENT	3
9	COML	NUT, FULL HEX, GRADE 5, ALLOY STEEL 3/4-10 UNC	72
8	MCMASTER CARR #91201A036	WASHER, FLAT, PLAIN, STEEL, 3/4" BOLT 1.500 O.D., .781 I.D., .24 MIN THKNSS	144
7	COML	SCREW, HEX HD, GRADE 5, ALLOY STEEL 3/4-10 UNC X 2" LG.	48
6	COML	NUT, FULL HEX, GRADE 5, ALLOY STEEL 5/8-11 UNC	24
5	MCMASTER CARR #98038A268	WASHER, FLAT, PLAIN, STEEL, 5/8" BOLT 1.313 O.D., .688 I.D., .122 MIN THKNSS	48
4	COML	SCREW, HEX HD, GRADE 5, ALLOY STEEL 5/8-11 UNC X 1-1/2" LG.	24
3	MD-444199	TOP HORIZONTAL SUPPORT WELDMENT	1
2	MD-444198	VERTICAL SUPPORT WELDMENT	2
1	MD-444632	LIFTING FIXTURE BASE ASSY	1

PARTS LIST

UNLESS OTHERWISE SPECIFIED			ORIGINATOR	V.GUARINO	19-JUL-2007
.XX	.XXX	ANGLES	DRAWN	D.FRIEND	19-JUL-2007
± ---	± ----	±----	CHECKED	G.SMITH	25-JUL-2007
			APPROVED	V.GUARINO	31-JUL-2007

1. BREAK ALL SHARP EDGES --- MAX.
2. DO NOT SCALE DRAWING.
3. DIMENSIONS BASED UPON ASME Y14.5M-1994
4. MAX. ALL MACH. SURFACES --- √
5. DRAWING UNITS: U.S. INCH

USED ON: ME-444635

MATERIAL: SEE PARTS LIST ABOVE

FERMI NATIONAL ACCELERATOR LABORATORY
UNITED STATES DEPARTMENT OF ENERGY

NOVA-DETECTOR_PROTOTYPE IPND LIFTING FIXTURE HORZ BLOCK LIFTING FIXTURE AND CART ASSY

SCALE	DRAWING NUMBER	SHEET	REV
1:16	3929.000-ME-444633	1 OF 1	

CREATED WITH : Ideas12NXSeries GROUP: PPD/MECHANICAL DEPARTMENT