REV	DESCRIPTION	DRAWN	DATE
		APPROVED	DATE

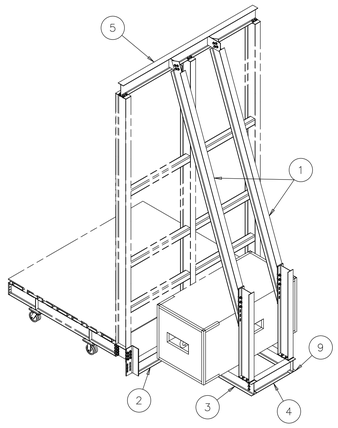

ISOMETRIC VIEW
SCALE: 1/32

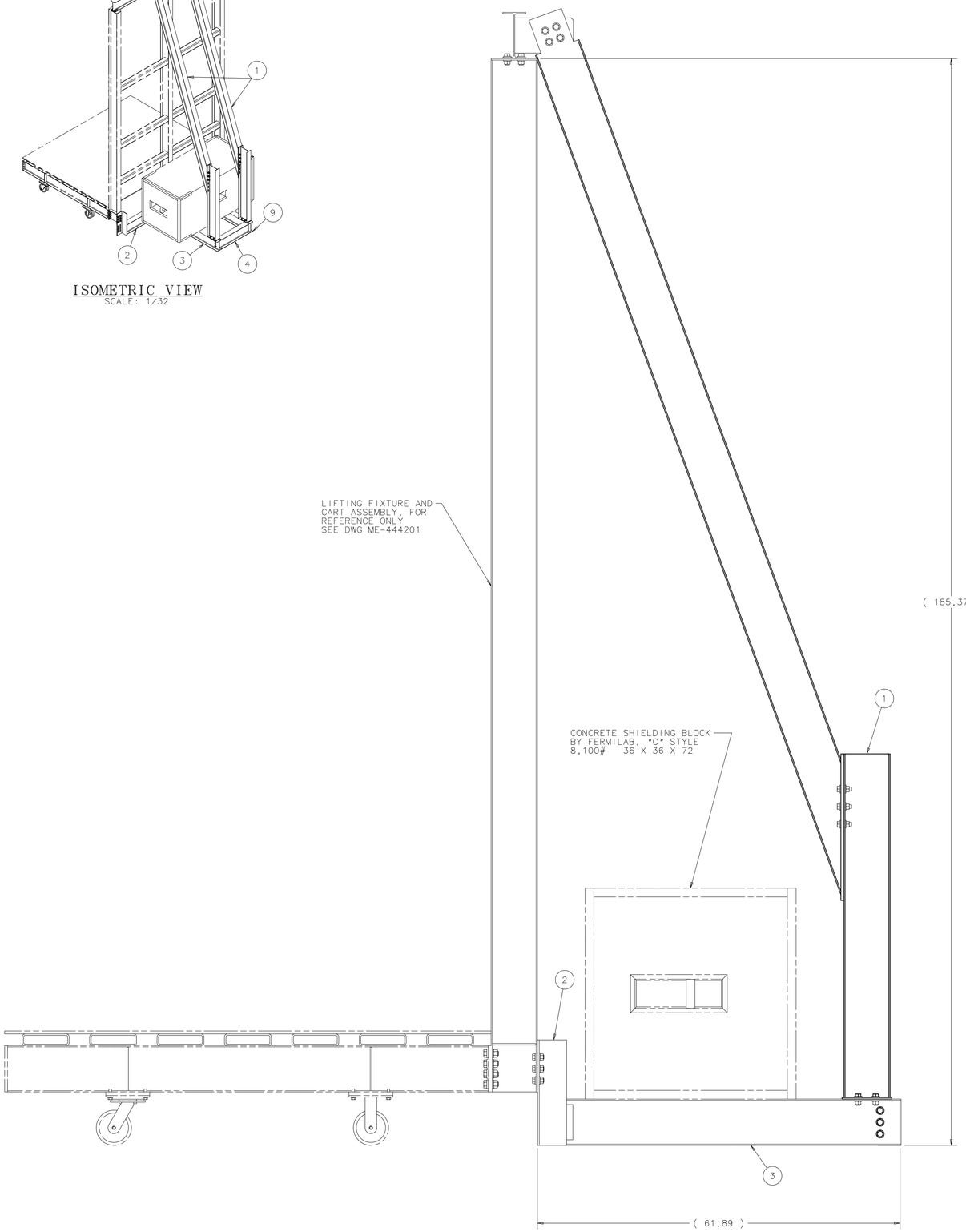

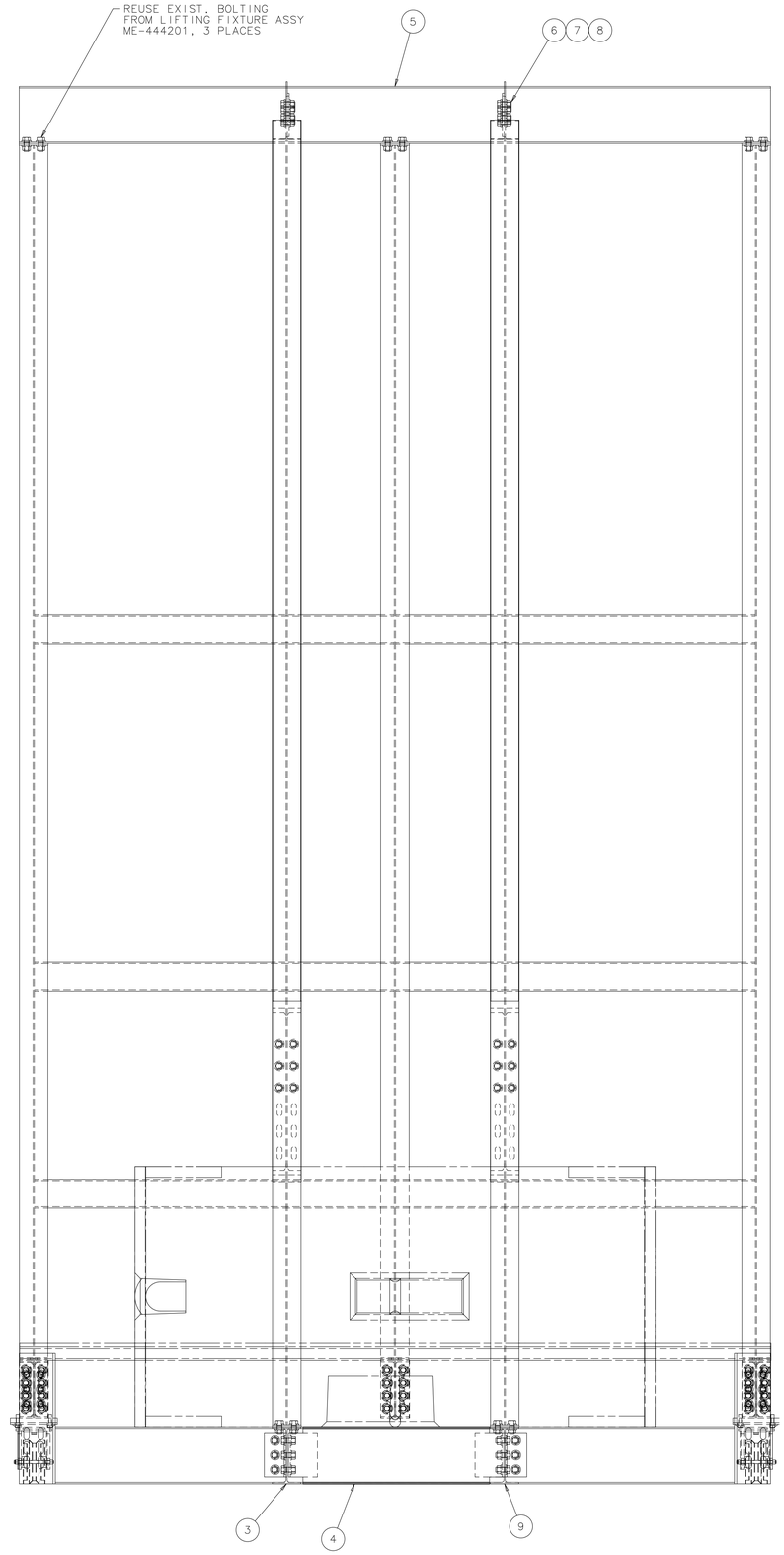

NOTES:

1. APPROXIMATE WEIGHT OF ASSEMBLY IS 732 LBS.

ITEM	PART NO.	DESCRIPTION OR SIZE	QTY.
9	MC-444540	BOOKEND FRAME LEG C WELDMENT RH	1
8	MCMASTER CARR #98038A268	WASHER, FLAT, PLAIN STEEL, 5/8" BOLT, 1.313 O.D., .688 I.D., .122 MIN THKNSS	80
7	COML.	NUT, HEX 5/8-11UNC STEEL GRD 5	40
6	COML.	SCREW HEX. HD. CAP 5/8-11UNC X 1.5 LG. STEEL, GRADE 5	40
5	MD-444266	BOOKEND TOP KICKER SUPPRT WELDMNT	1
4	MC-444262	BOOKEND FRAME LEG B WELDMENT	1
3	MC-444539	BOOKEND FRAME LEG C WELDMENT LH	1
2	MC-444260	BOOKEND FRAME LEG A WELDMENT	1
1	MD-444254	BOOKEND KICKER WELDMENT	2

PARTS LIST

UNLESS OTHERWISE SPECIFIED			ORIGINATOR	V.GUARINO	18-JUL-2007
.XX	.XXX	ANGLES	DRAWN	J.MATESKI	18-JUL-2007
± ---	± ---	± ---	CHECKED	G.SMITH	25-JUL-2007
			APPROVED	V.GUARINO	31-JUL-2007

1. BREAK ALL SHARP EDGES --- MAX
2. DO NOT SCALE DRAWING.
3. DIMENSIONS BASED UPON ASME Y14.5M-1994
4. MAX. ALL MACH. SURFACES --- √
5. DRAWING UNITS: U.S. INCH

USED ON

MATERIAL
SEE PARTS LIST ABOVE

FERMI NATIONAL ACCELERATOR LABORATORY
UNITED STATES DEPARTMENT OF ENERGY

NOVA-DETECTOR_PROTOTYPE
IPND LIFTING FIXTURE
BOOKEND SUB-ASSY

SCALE	DRAWING NUMBER	SHEET	REV
1:8 & NOTED	3929.000-ME-444253	1 OF 1	

CREATED WITH : Ideas12NXSeries GROUP: PPD/MECHANICAL DEPARTMENT