NOvA DAQ Hardware
Data Combiner Module

Richard Kwarciany

(slides stolen from various authors)

16-August-2006

DAQ Network

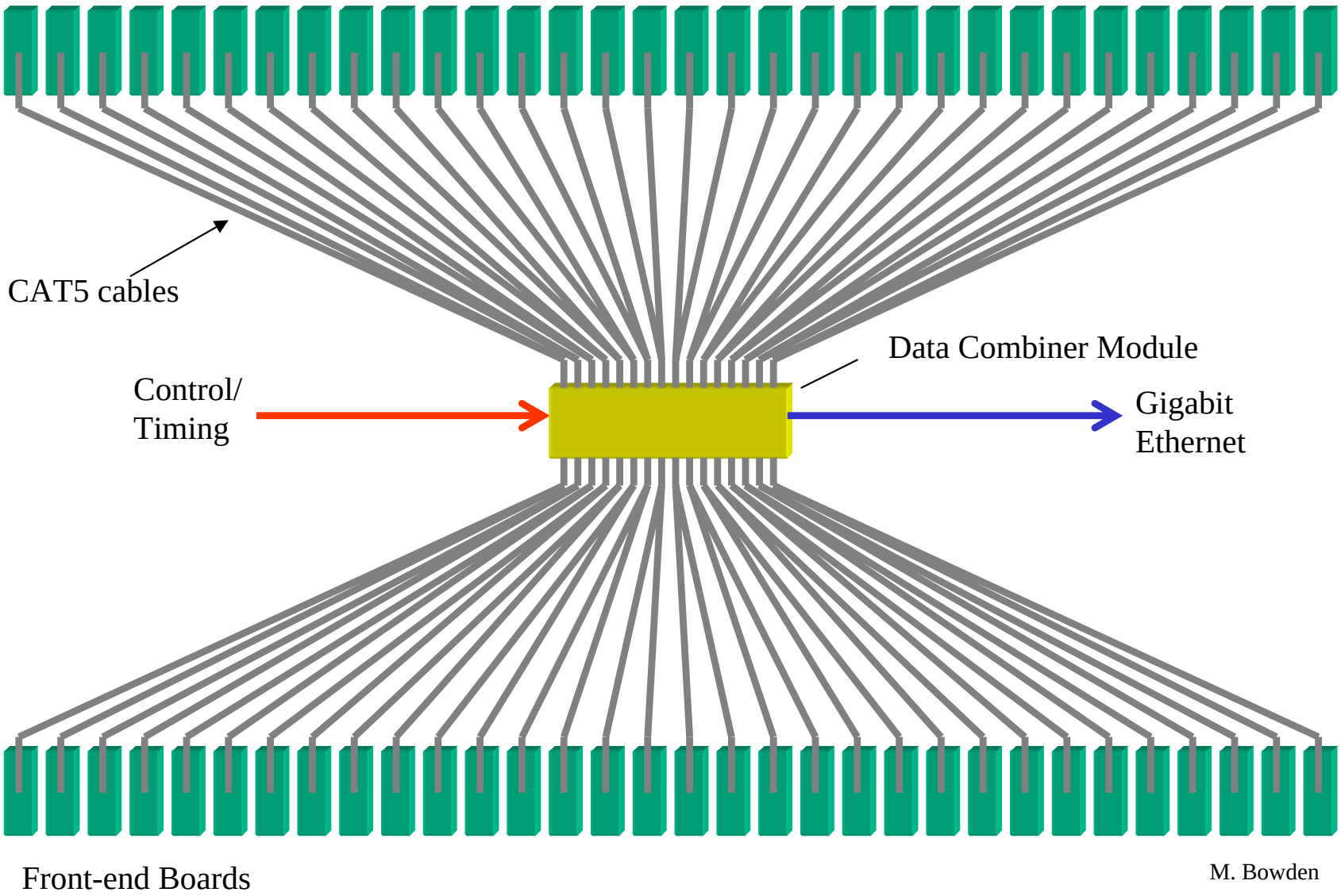

M. Bowden

DAQ on the Detector

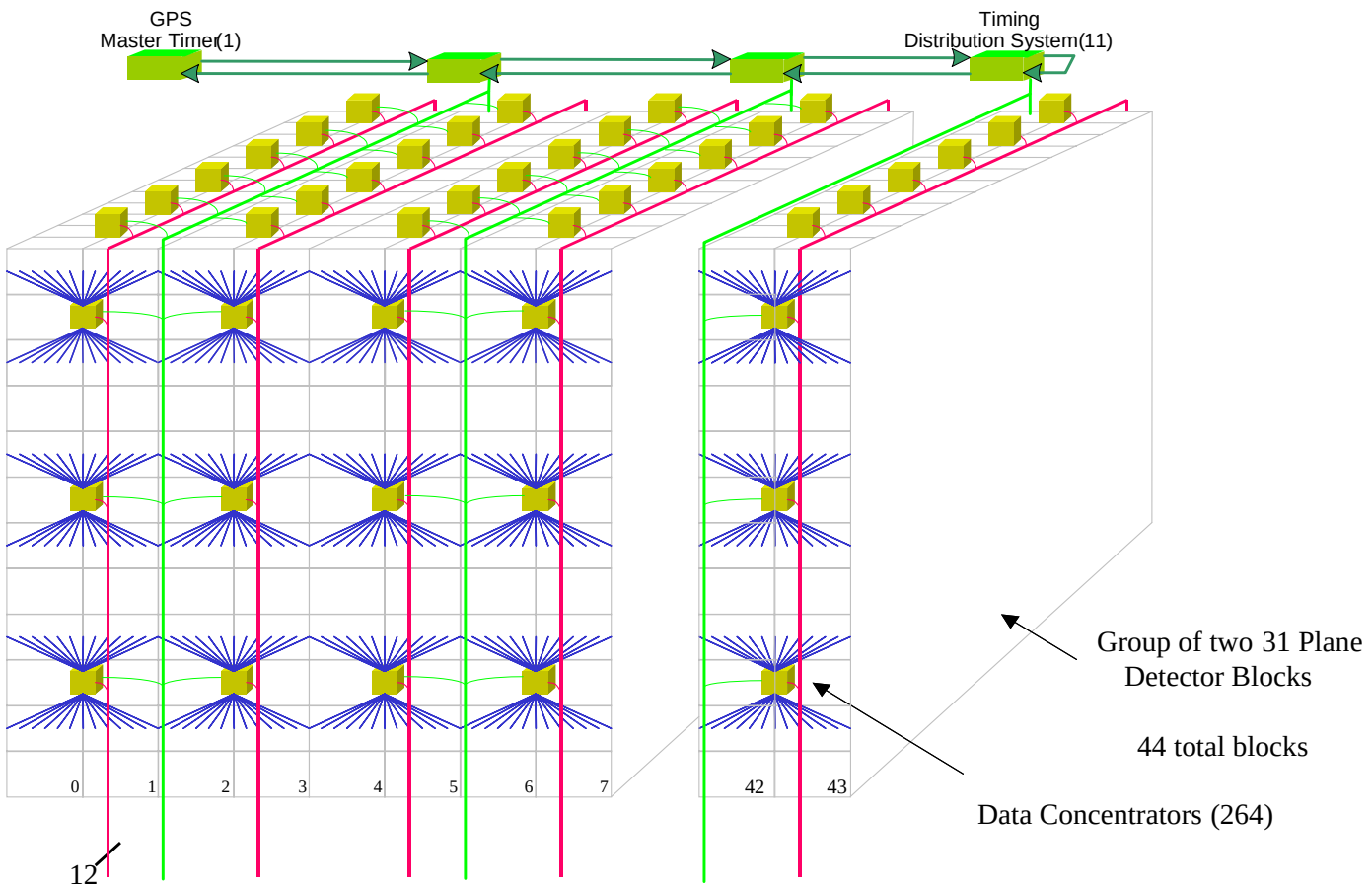

Gigabit Ethernet

M. Bowden

DAQ - 1.7.x and 2.7.x
Front-end Data to Farm

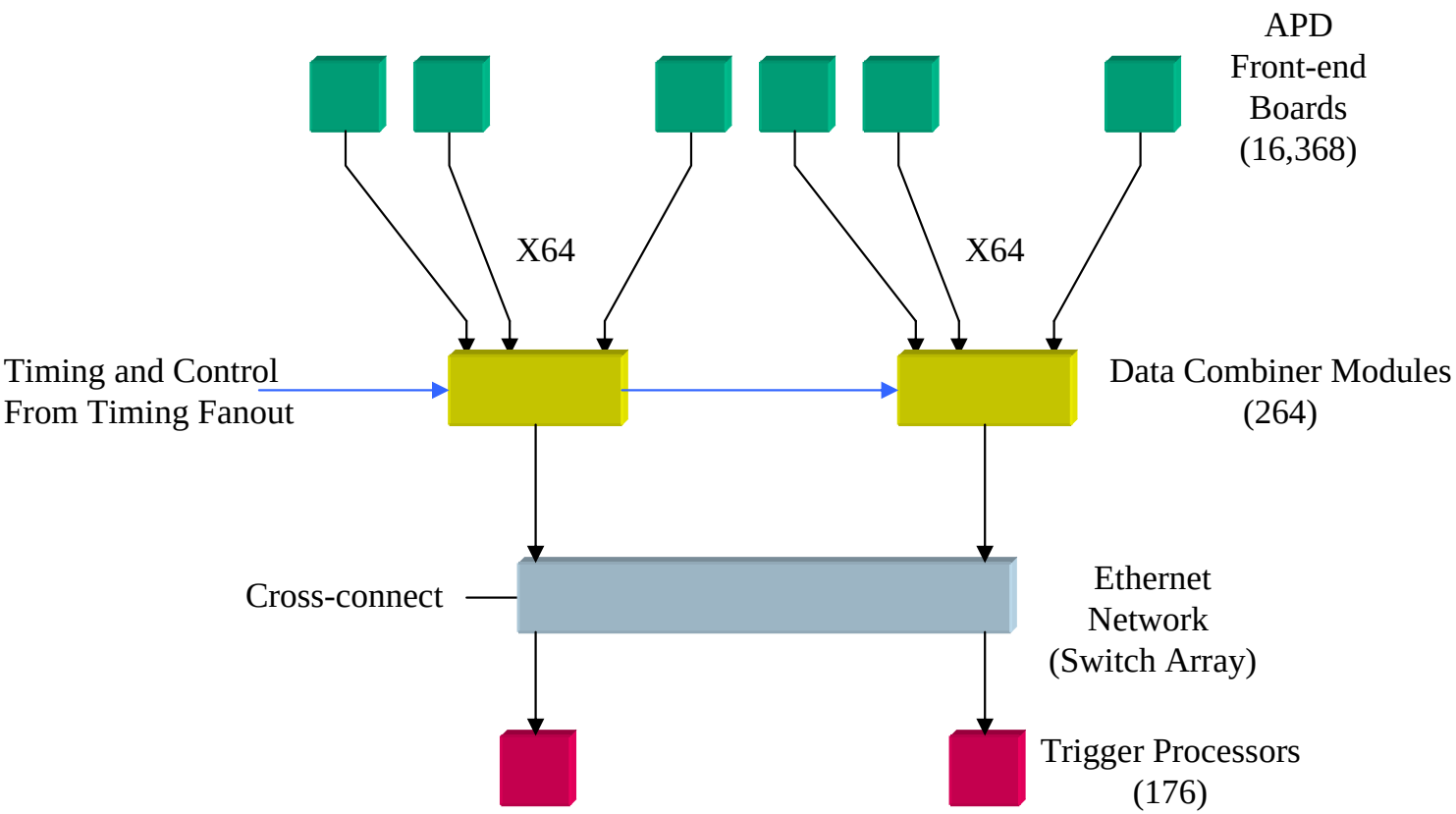

M. Bowden

Timing System

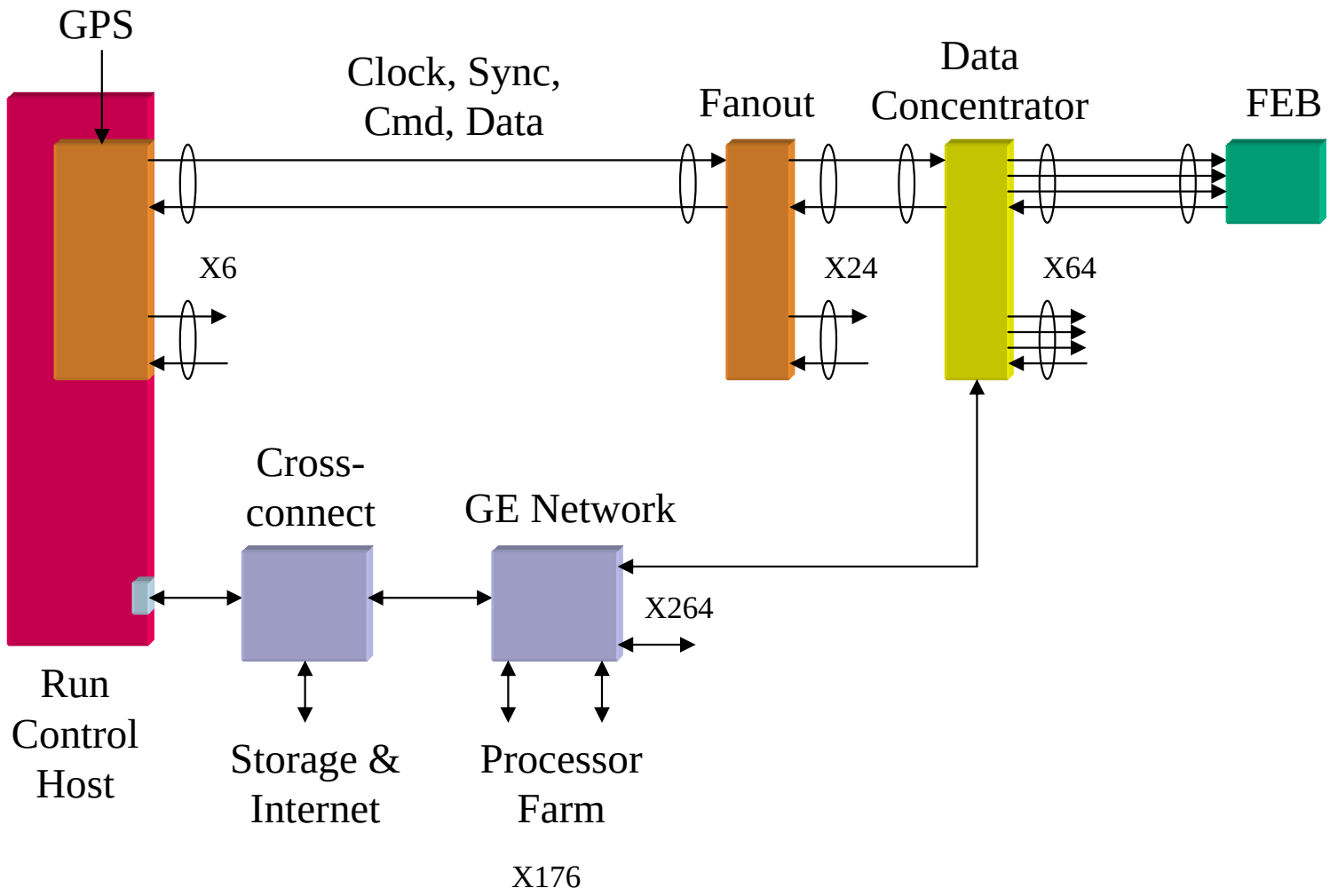

M. Bowden

DCM Block Diagram

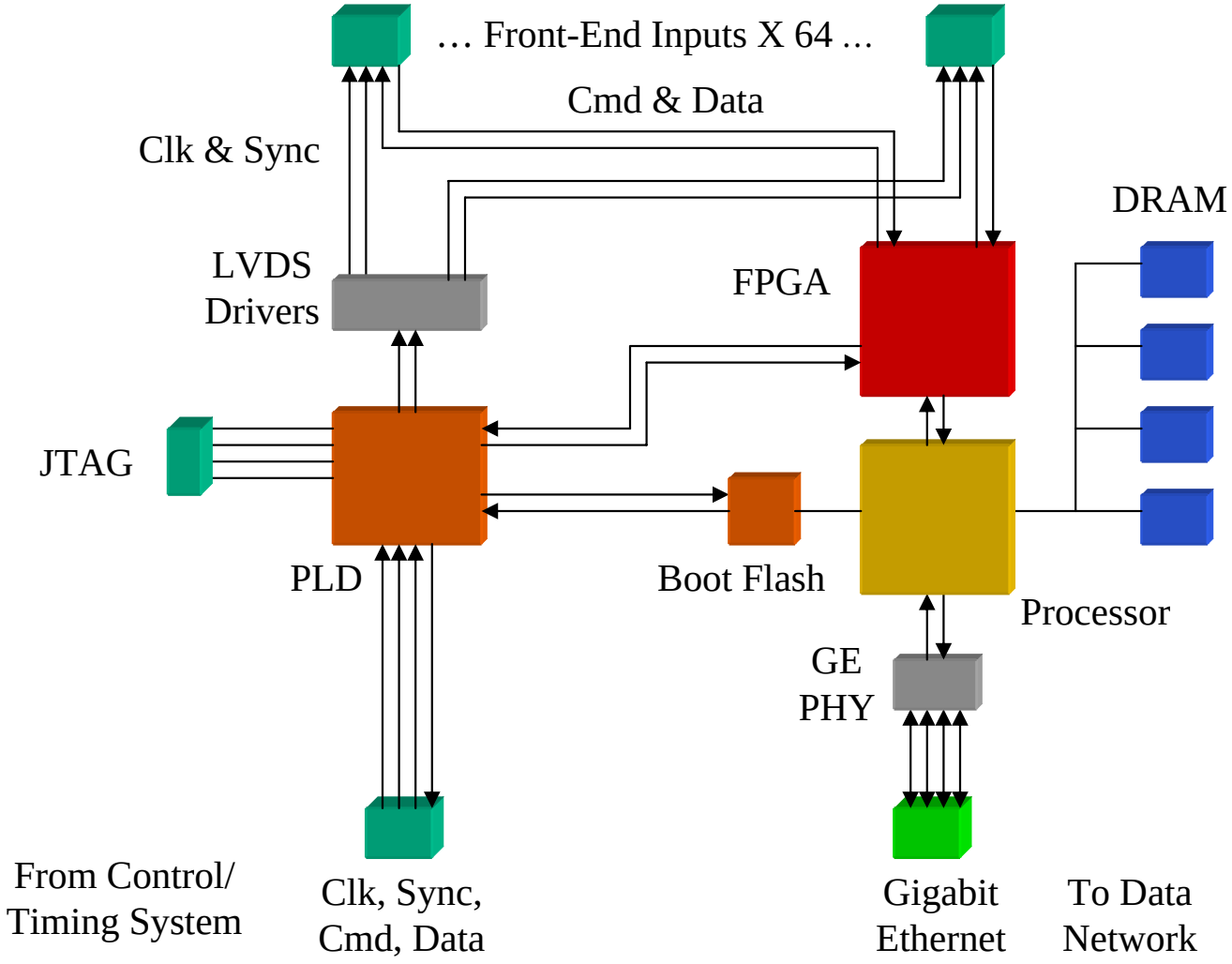

M. Bowden

DCM Layout (In Progress)

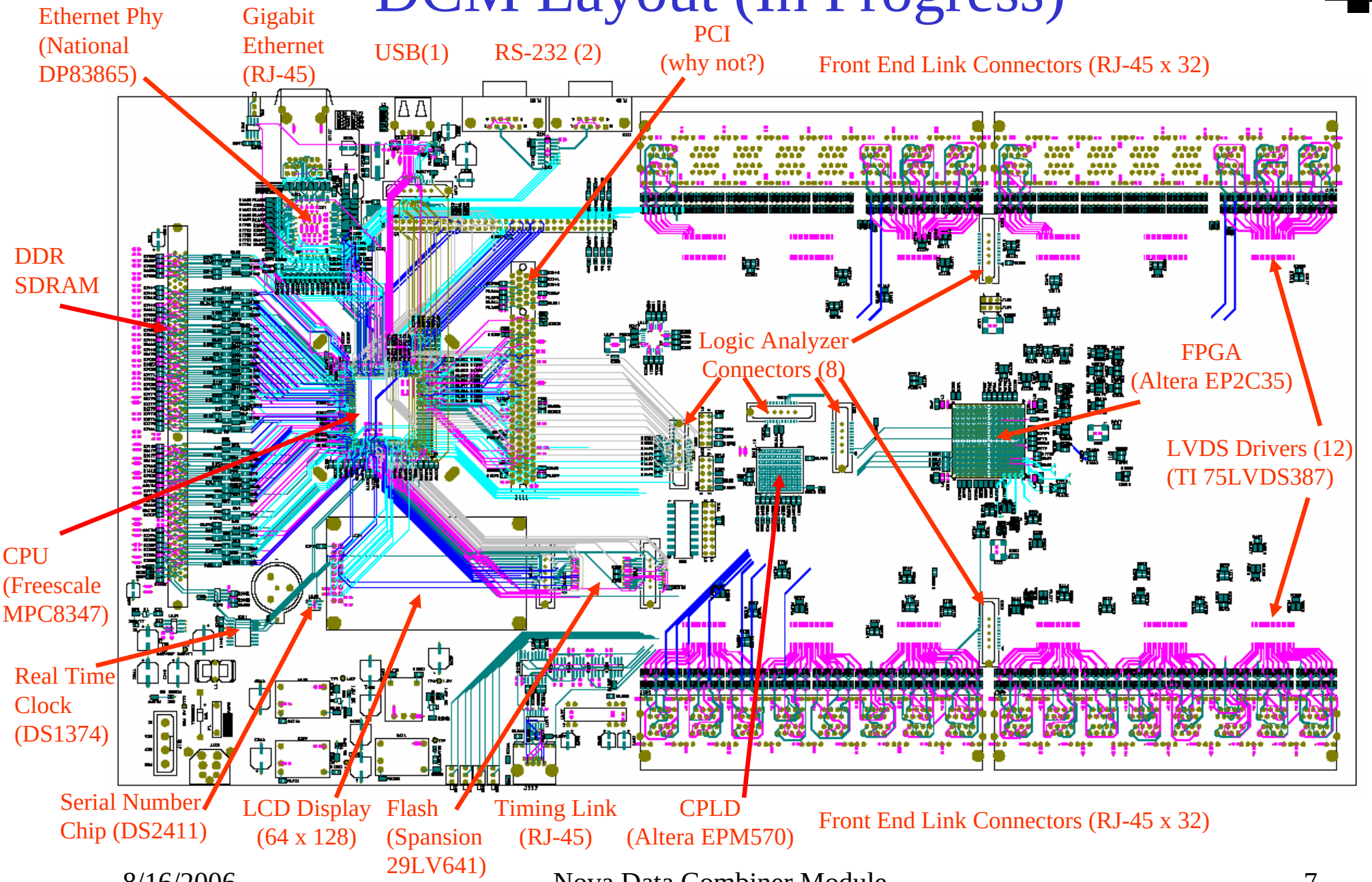

Project Drivers & Scope

- Description
  - ESE is collaborating on the design the DAQ system for NOvA.
- Scope
  - Design consists of custom Data Combiner Module (DCM) and Timing Distribution System (TDS), commercial Ethernet based network components, processor and storage nodes. ESE will design and build the DCM & TDS, and specify the network components and network configuration.
- Schedule
  - Working DCM prototypes due this fall and TDS prototype by end of the year. Pre-production modules are due December 2007, and production modules before 2009.
- Effort
  - ESE providing approximately 1.5 FTEs now. The plan is to maintain this level at least into the pre-production phase.
- Stakeholders
  - Rick Kwarciany – DCM designer, Bill Haynes – TDS Designer.
  - Vince Pavlicek – DAQ Electronics level 3 mgr.
  - Leon Mualem – NOvA DAQ level 2 manager.
  - Mark Bowden – System architecture consultant.

end

Background and
Additional Information Slides

DAQ Network

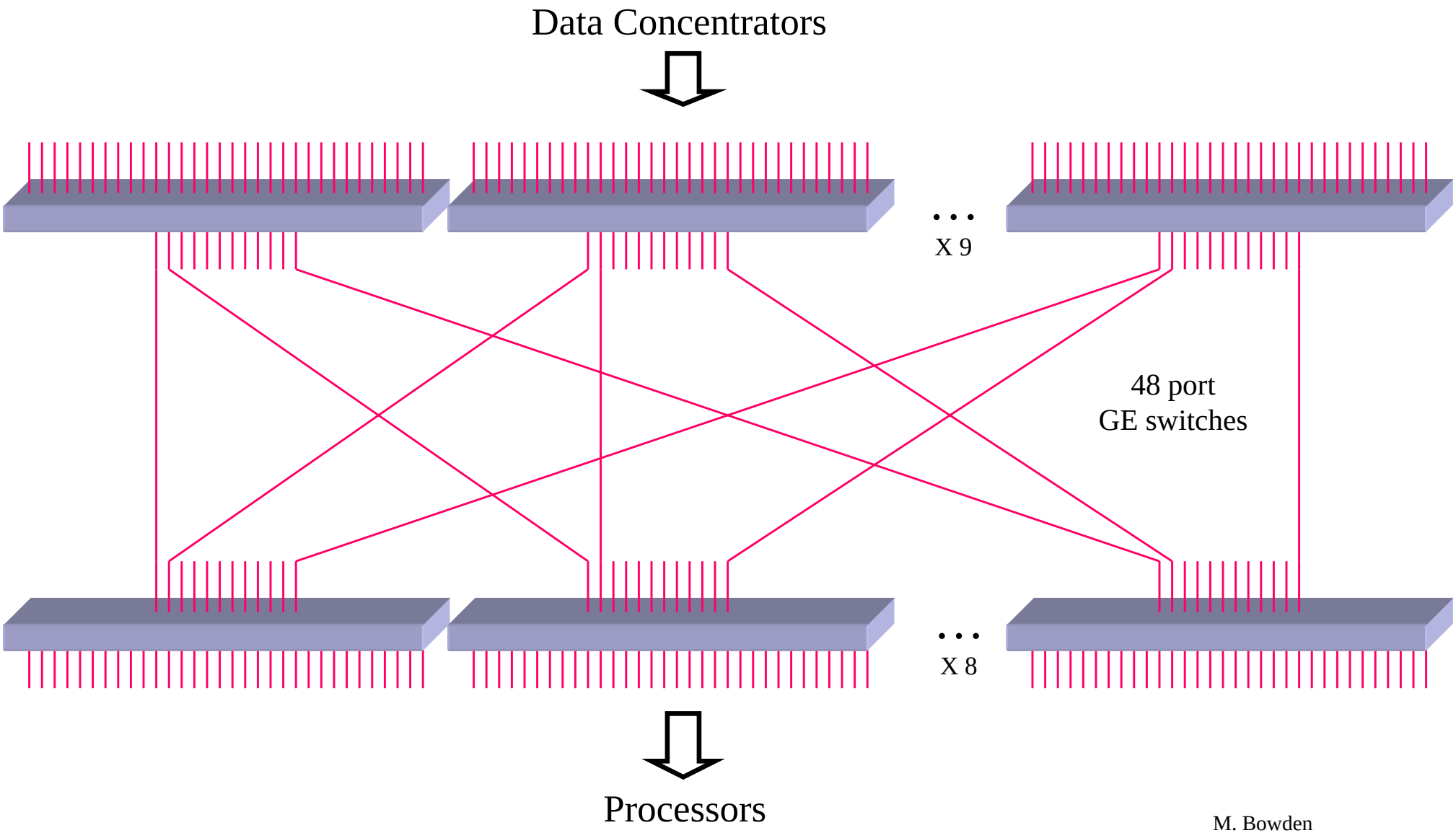

M. Bowden

DAQ Network - Realization

COTS SWITCHES

M. Bowden

Dataflow

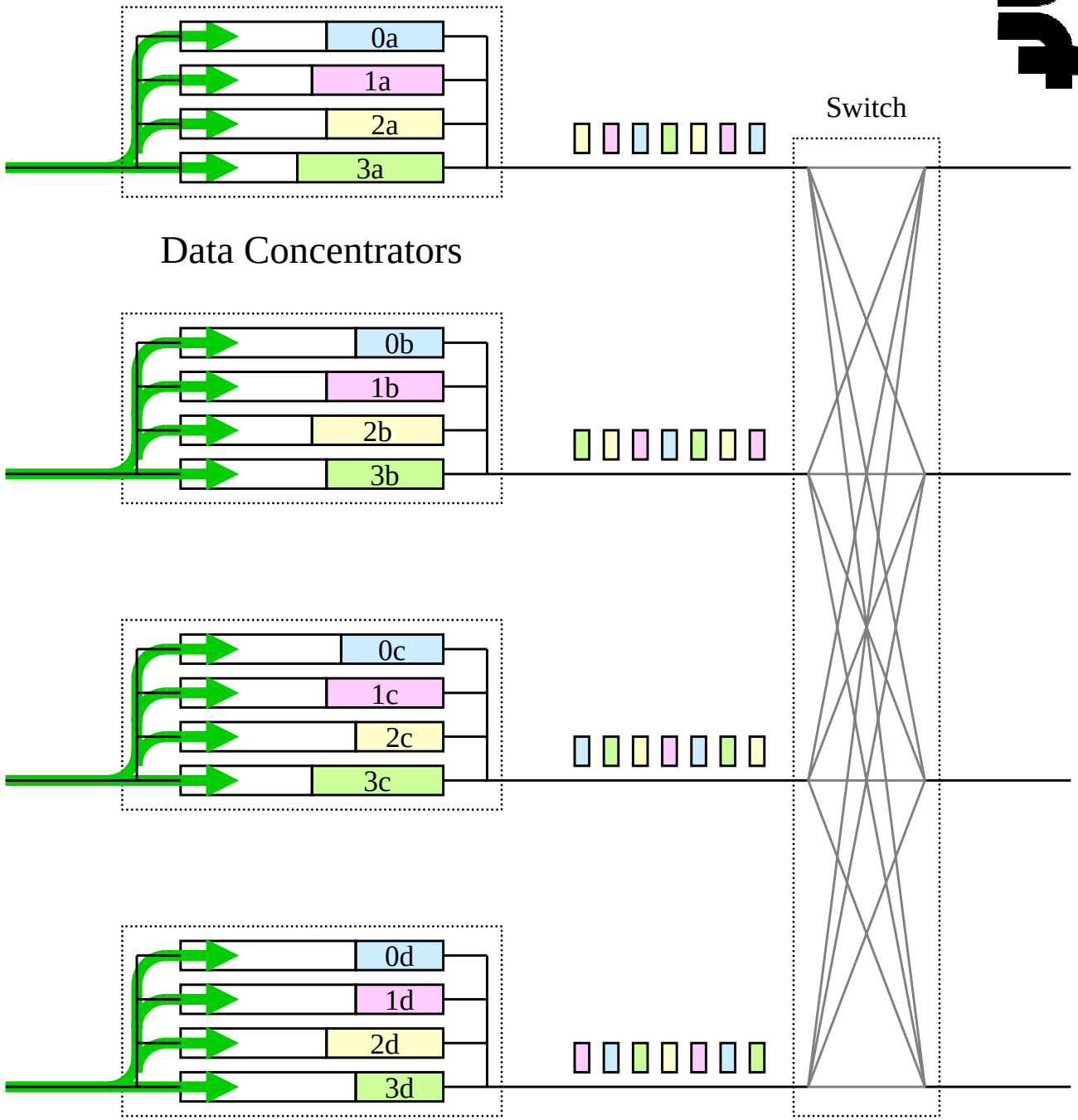
0a
1a
2a
3a
Switch
Data Concentrators
0b
1b
2b
3b
0c
1c
2c
3c
0d
1d
2d
3d

Dataflow2

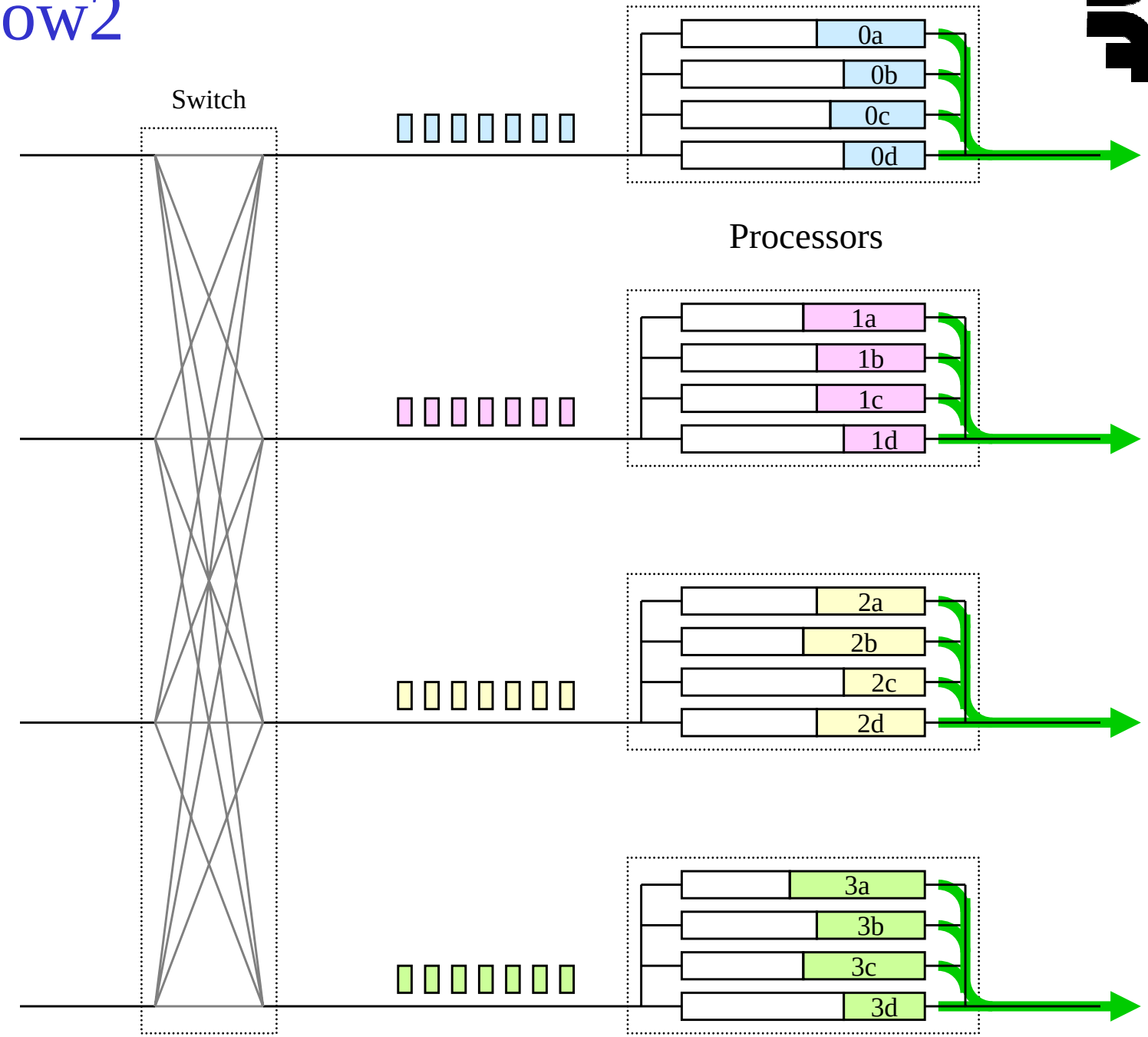

Assemble into planes

- 12 extrusions wide (= 15.7 m)
  - So the beam view is a square detector
- Alternate cell orientations and readout from layer to layer
  - Left, Top, Right, Top
- Epoxy the planes together into blocks 31 planes thick
  - So all horizontal extrusions are supported by two verticals

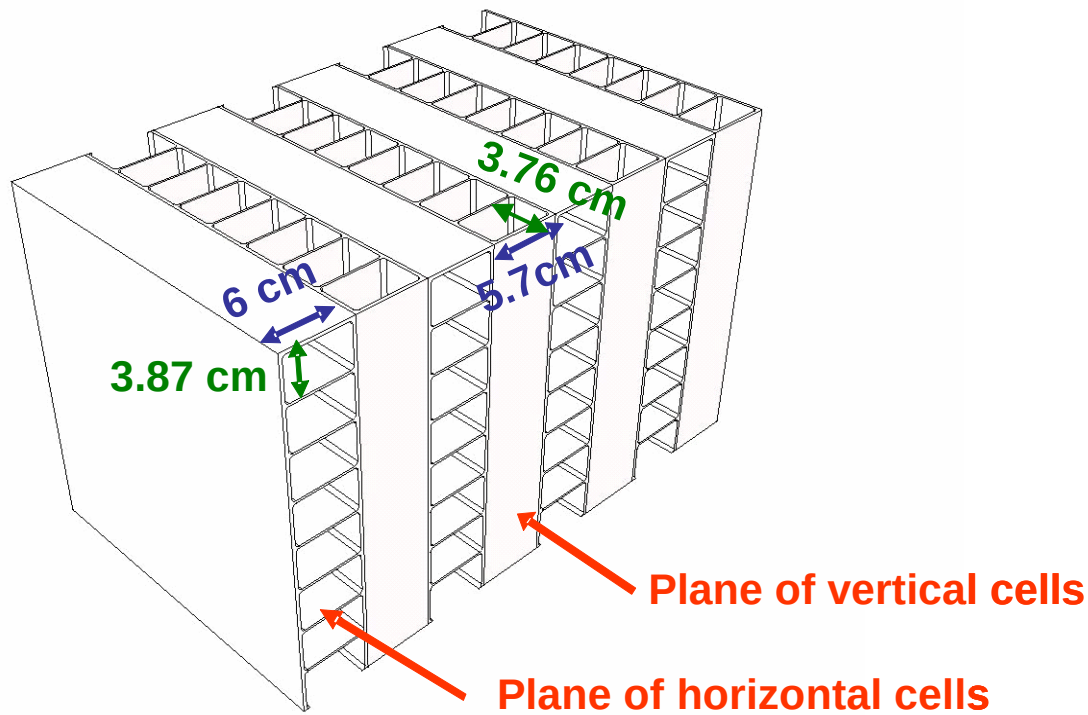

Building

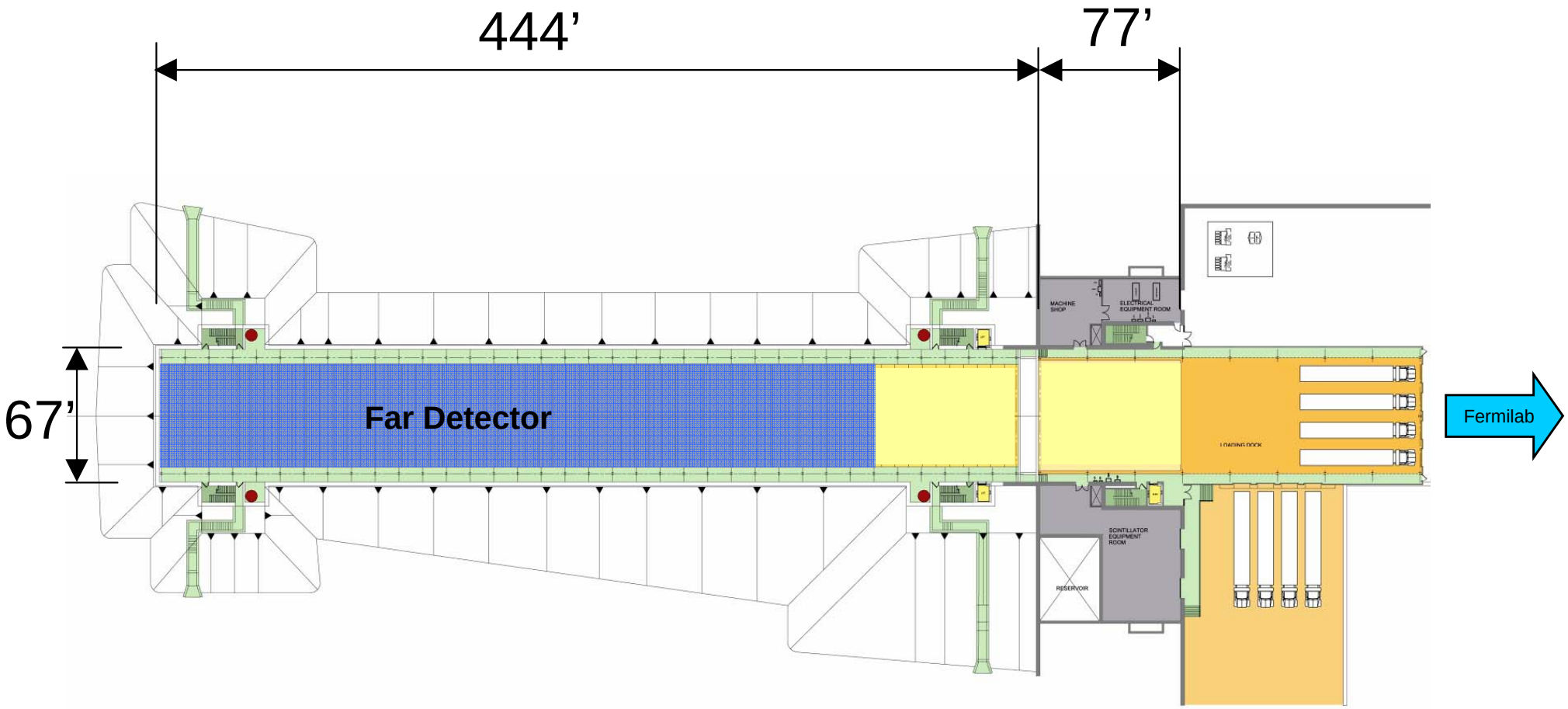

Scale

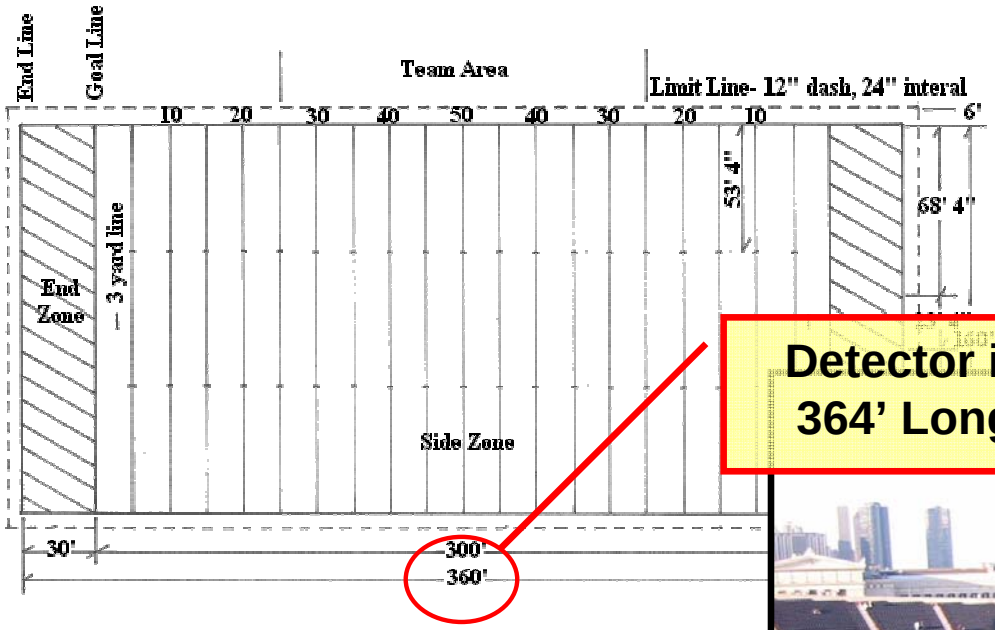

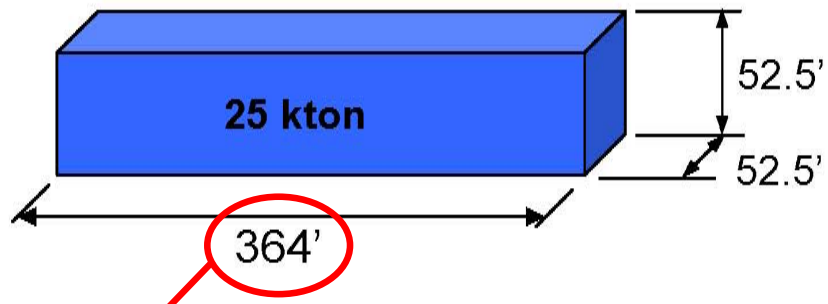

Detector is 364' Long

Electronics and DAQ

- DAQ/Elec Workshop (May 9-10)
  - Defined interface and data flow between FEB, DCM, and DAQ
  - Get pulse height and time bin (62.5ns bins)
  - Defined data rates, startup procedures
  - Segmentation issues, run control
  - Began slow control definition
  - Data rates expected to be lower by about 4x
    - (more realistic simulation of muons)