NOvA APD Cooling Water Update

William Gilbert

University of Minnesota

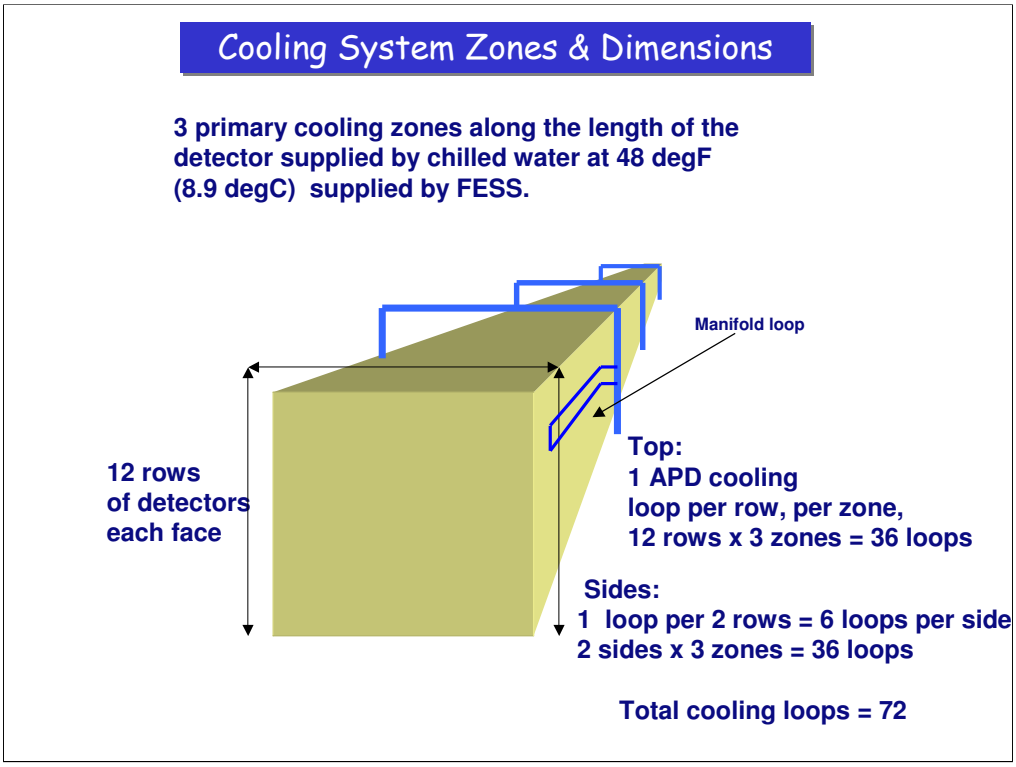

Subject to change as detector morphs to new sizes & shapes. The figures in this presentation are based on 20 kiloton dimensions.

Manifold loops supplying water to APDs will run in ~ 1meter spaces between rows of APD boxes.

Good news is that this system is SCALEABLE

Once dimensions stabilize, changes in heat load can be met by changing components that don't have major impact on total cost.

Two Major changes from last concept:

*chill water zones reduced from 4 to 3

*doubled loop length on sides, resulting in half number of loops & pump units needed there.

*total resulting number of pump units cut by half from 144

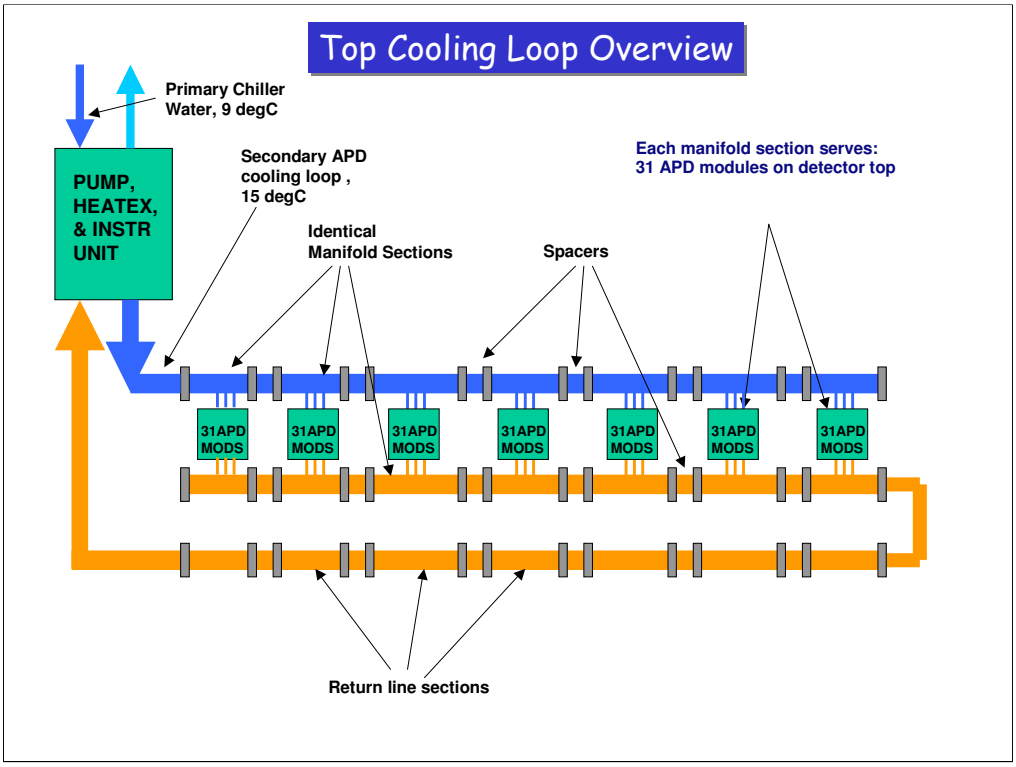

Each loop is a closed system isolated from main chill water supply by heat exchanger.

Each loop starts at a unit containing the pump, heat exchanger, fluid reservoir, and remote I/O(more in later slide)

Water is delivered to APDs by 1/4'' hoses connected to modular manifold units used in both supply and return side of loop.

Water comes back in return line sections of same length as manifolds.

Manifold sections are designed to serve a block of 62 planes, so that cooling system can be assembled and run incrementally as detector is built up if necessary.

For 20 kton detector, with 22 blocks of 62 planes, there would be 2 zones with loops 7 manifold sections long, and 1 zone of loops 8 manifold sections long.

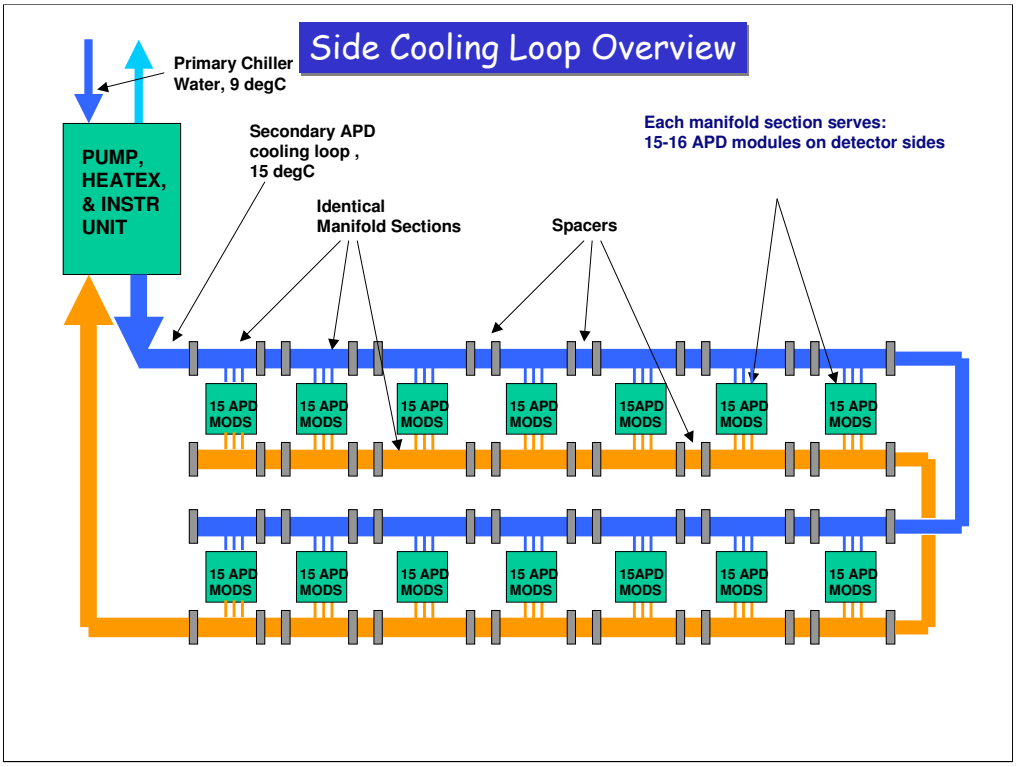

Since APD density is half that of rows on detector top, Loop length has been doubled to serve two rows.

Each pump unit, topor side, now serves same number of APD modules with approximately the same heat load and flow requirements.

Also eliminates need for separate return lines used on detector top loops.

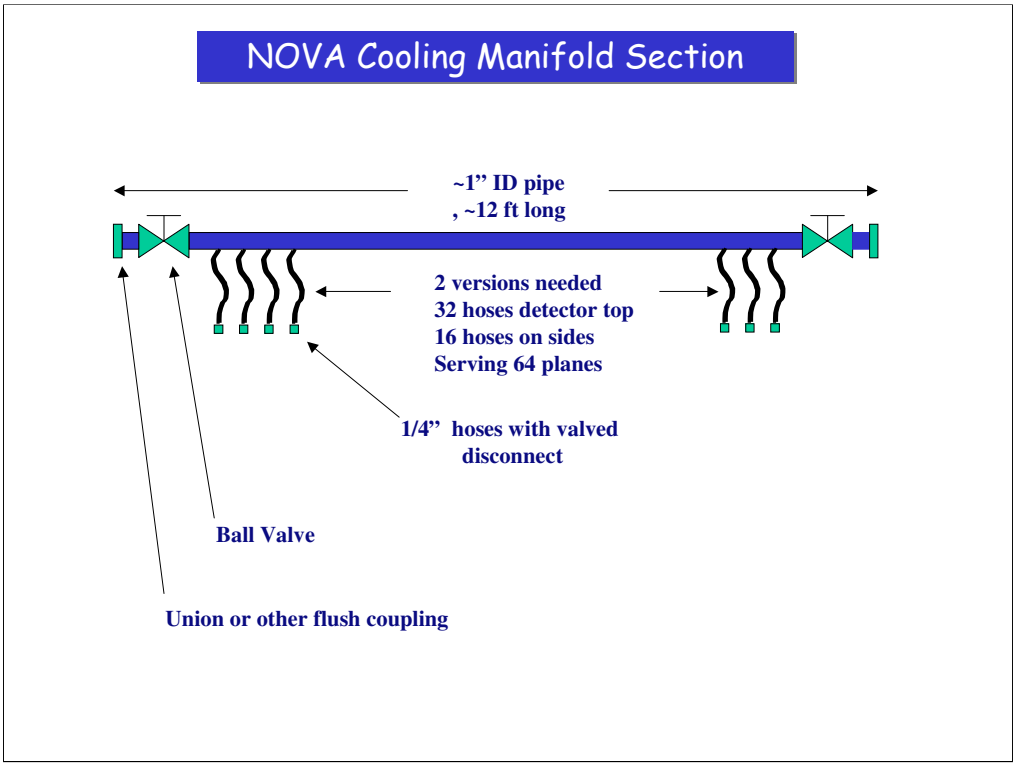

Modular manifolds keep length in easy to ship range, which is important, since we want to have these contract manufactured.

Exact number of hoses(planes) needed is in flux. Since quick disconnect fittings are valved, unused hoses really aren't a problem, we just need to make sure there are enough. A hose plus or minus doesn't affect cost much.

Two versions of manifolds needed, 1 for detector top with about 30 hose taps, 1 for detector sides with about half that number.

Before downsizing this was 32/16. and we received estimates from two different suppliers with different construction materials & methods.

Both close to same cost. For the 32 tap manifolds about $780, 16 tap $580, including insulation.

Descriptions:

1) Georg Fischer, big industrial process piping supplier, using HD polyethylene pipe with hose fittings welded(ultrasonically?) in to manifold, using true union ball valves between coupling on ends. Good idea, since manifold can be disconnected on either side of valve, only one valve is needed between each section.

2) Tiger Tech, smaller hose product distributor and custom manufacturer. They would build from PVC pipe, drilled & tapped for 1/8" NPT metal hose barbs, with crimped hose attachments. they propose standard PVC ball valves on ends, with rubber sleeve & clamp couplings used to join sections.

Both suppliers have said anything smaller than 1 inch pipe would make these difficult to manufacture.

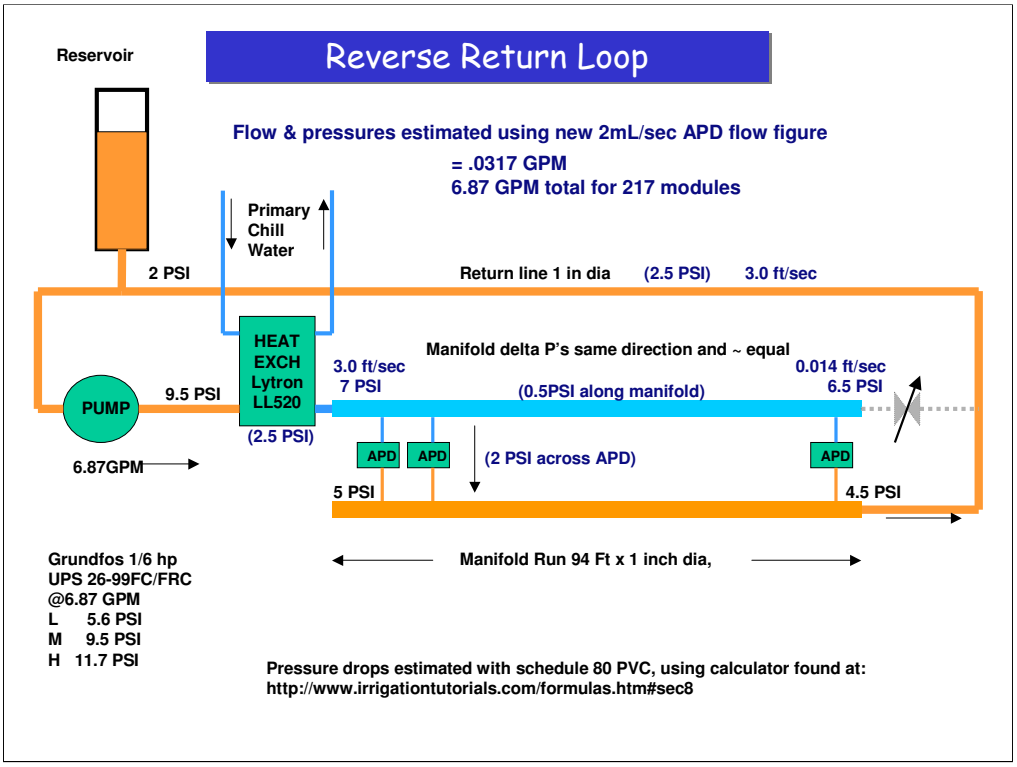

This is a reverse return manifold system showing estimated pressures using the 2 ml/sec flow figure from Indiana

Pressure (drops) are in parentheses.

Manifold delta P is from web friction calculator using 1/2 flow rate as average across length

APD modules need to develop necessary flow at some nominal higher pressure to prevent small pressure variations from unbalancing APD flow dramatically. We have suggested 2psi .

Pump is a 1/6 hp version of 3 speed Grundfos Suoerbrute running at medium power(curves data on later slide)

This 3 speed pump could be dialed down for side loops at half the flow shown in this example, so a single model could be used interchangeably in all loops.

Supply bypass leg shown in gray may be needed to maintain supply manifold temperature uniformity(not sure)

These are rough estimates only. See info on computational modeling software on Macroflow slide.

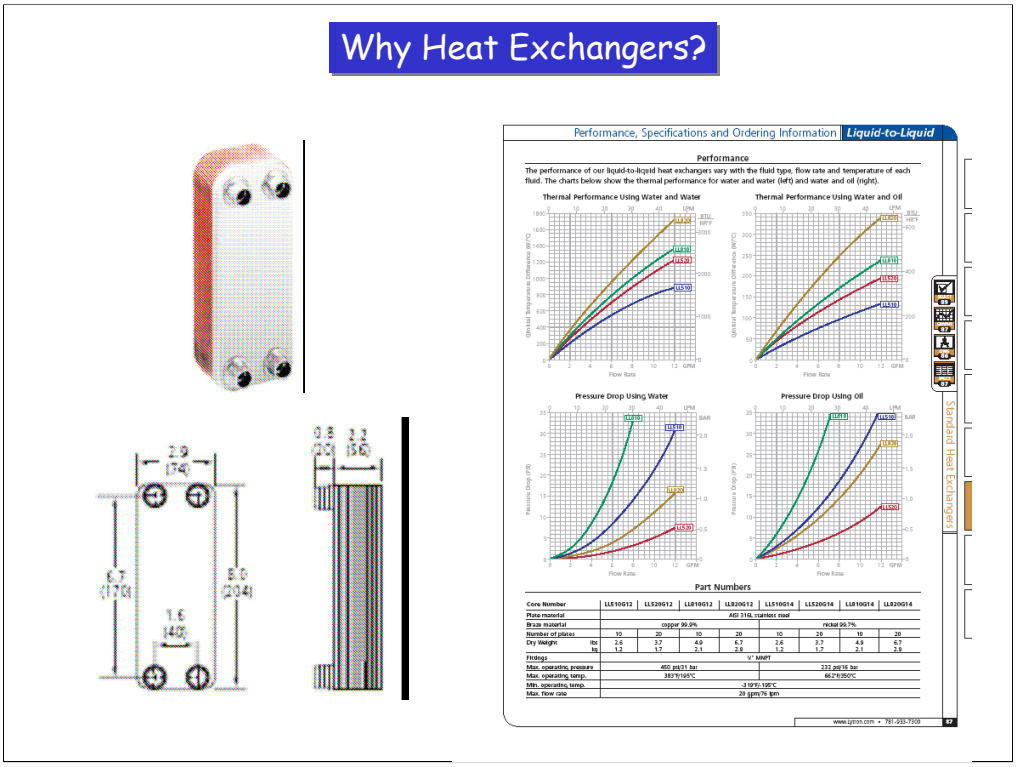

Why use Heat exchangers?

*Limits fluid available for a given leak to contents of one loop, about 13 gallons.

*Allows leak detection by remote monitoring of fluid level in loop reservoir.

*Localization of detected leaks to 434 hoses along 94 feet of manifold, instead of 40,176 hoses along 14,400 feet of manifolds

*Isolates loop from fluid head due to height of detector, which would be about 22 psi near floor.

*Contains air bubbles introduced due to maintenance or leakage. Imagine trying to bleed the brakes on a car with 20,000 calipers.

Model shown is Lytron LL520

Have been using this unit as our example, because Lytron has so much published data available.

Tranter, suggested by FES, makes a welded stainless unit, but they are about 5x $200 price tag of this LL520. We can keep it in mind. Lytron suggests a nickel brazed option for de-ionized water.

More research needed. Water/glycol mix may be better for us anyway.

Single Loop Heat Calculations

5w per APD module x 217units = 1085w
Assume (guess) heat pickup in pipes, etc = 1085w
Total = 2170w

Loop delta T = Q(watts) / [263 x Flow(GPM)]
= 2170w / [263 x 6.87GPM]
= 1.2 degC

ITD = initial temp difference of fluids entering heat exchanger
= (APD water + del T) - FESS chilled water
= (15 degC + 1.2deg C) - 8.9 degC = 7.3 deg C

Q / ITD for this flow & load = 2170w / 7.3 degC = 297

Compared to high limit value, 800, from Lytron chart for this flow rate,
297 is much lower, so this is well within capacity of LL520!

I this slide we perform a heat load calculation and check to see if it is in the range of the selected heat exchanger.

Formula for loop delta T is modified version of specific heat formula, Q = cm(dT).

Time units in top and bottom cancel out, units converted for input of watts and water GPM.

It appears that our total heat load could increase substantially and still be OK.

Since delta T, and thus bottom term ITD, increases along with heat load, Q/ITD rises slower.

Macroflow is a CAD tool that is written by Innovative Research in Plymouth, MN.

Company founded by a retired UMN ME professor, Suhas Patankar.

We have made preliminary contact with them last fall. Might be well worth our while to let them model our loop design before we prototype it, and alternate designs if necessary. Full license $5k, but lower cost short term license or fee based consulting also possible.

Loop Volume

Using 1” dia manifolds, pipes, and 20k ton dimensions,

Former water volume, 27 sections long, = 1843 gal
x reduced section count (22/27)
~= 1500 gal

Left out hoses and APD modules, but this gives us a ballpark figure.

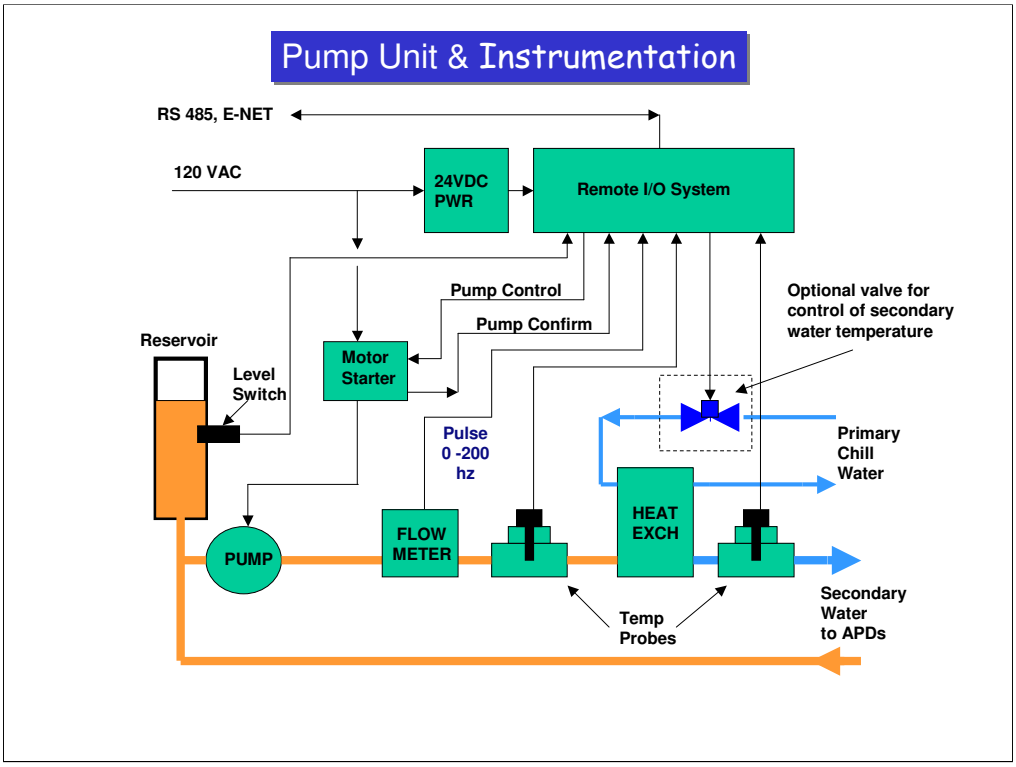

More detail on pump unit, showing instrumentation.

Remote I/O subsystems are available from several vendors, National Instruments, Advantech, Acromag, Opto 22, etc.

Advantech's ADAM series looks promising, with an OPC server available. Should allow easy integration with commercially available HMI/SCADA software such as NI Lookout, Wonderware, etc. This needs thorough research. Caveat emptor.

We have used NI Lookout in a small monitoring system for 5 years now, and it has performed well. See last slides for some screenshots from that system.

Pump Unit Cost Estimate

:

1	Remote I/O Unit (Advantech Adam 5000)	$ 600	$ 600
1	Pump 1/6 hp	$ 200	$ 200
1	Motor Starter	$ 120	$ 120
1	Heat Exchanger (~LytronLL520)	$ 200	$ 200
1	Fluid Reservoir	$ 50	$ 50
1	Fluid level switch(float, capacitive, other)	$ 80	$ 80
2	Temp probes, RTD in welded SS fitting	$ 50	$ 100
1	Flowmeter (Proteus 06008BN14)	$ 180	$ 180
1	24 VDC Power Supply	$ 80	$ 80
1	enclosure	$ 200	$ 200
x	Misc pipe, wire, cable	$ 100	$ 100
40	man-hours assembly:	$ 50	$ 2000
	Total		$ 3910

New Top Loop Cost Estimate

Cost estimate for average loop on detector top:

14.67	Top(32 tap) manifold assembly	$ 780	$ 11440
1	Pump & Instrumentation Unit	$ 3910	$ 3910
x	Misc pipe, wire, cable	$ 100	$ 100
24	man-hours assembly:		
	mount 14.67 manifold sections		
	make ~234 quick connects		
	mount & connect pump unit & other components		
	install wire duct, field wiring, fill, test etc.	$ 50	$ 1200
	single loop subtotal		$ 16650

Revised estimate using manifold estimate from G Fischer, higher power pump, and 20k ton dimensions.

For 20 kton detector, with 22 blocks of 62 planes, there would be 2 zones with loops 7 manifold sections long, and 1 zone of loops 8 manifold sections long. [(7 +7+8) x2] / 3 = 14.67, average number of manifolds for costing.

Illustrates the significant role of manifold cost.

cost of spacer sections and return pipes ignored

New Side Loop Cost Estimate

29.33	Side(16 tap) manifold assembly	$ 580	$ 17013
1	Pump & Instrumentation Unit	$ 3910	$ 3910
x	Misc pipe, wire, cable	$ 100	$ 100
30	man-hours assembly:		
	mount 29.33 manifold sections		
	make ~234 quick connects		
	mount & connect pump & other components		
	install wire duct, field wiring, fill, test etc.	$ 50	$ 1500
	Single loop subtotal =		$ 21523

This is for new double length side loop configuration. Cuts number of side loops in half

For 20 kton detector, with 22 blocks of 62 planes, there would be 2 zones with loops 14 manifold sections long, and 1 zone of loops 16 manifold sections long(doubling back). [(14+14++16) x2] / 3 = 29.33, average number of manifolds for costing.

return pipes not needed

cost of spacer sections ignored

Total Cooling Loop Cost Estimate

36	**Loops, Detector Top**	**$ 16650ea**	**$ 599400**
36	**Loops, Detector Sides**	**$ 21523ea**	**$ 774828**
		Grand Total =	**$1,374,228**

Again, based on 20 KT dimensions.

This estimate does not include slow controls software or integration costs. Also assumes cost of chilled water system from FES is accounted for elsewhere.

Old Loop Cost Estimate

SWAG cost estimate for loops on detector top, side loops a bit lower:

1	Pump 1/25hp bronze cast	$ 150	$ 150
1	Heat Exchanger (~LytronLL520)	$ 200	$ 200
16	Top manifold assembly	$ 830	$ 13280
1	Fluid Reservoir	$ 50	$ 50
1	Fluid level switch(float, capacitive, other)	$ 80	$ 80
2	Temp probes, RTD in welded SS fitting	$ 50	$ 100
1	Flow switch (~Omega FST-211-SPST)	$ 160	$ 160
1	enclosure	$ 200	$ 200
6	Remote I/O channels(2 temp, 1flow, 1 level, 1 pump status, 1 pump control)	$ 200	$ 1200
x	Misc pipe, wire, cable	$ 100	$ 100
24	man-hours assembly: mount 8 manifold sections make 512 quick connects mount & connect pump & other components install wire duct, field wiring, fill, test etc.	$ 50	$ 1200
	Total		$ 16720

Previous estimate with truly WAG manifold cost, 30k ton dimensions

SuperBrute Brochure

Advantages:

- Removable, integrated check valve does not diminish pump performance
- Eliminates the expense of an inline check valve
- Prevents thermo-siphoning
- Easily match pump performance to system requirements
- 3-year warranty

Technical Data:

Flow Range: 0 - 17 U.S. GPM

Head Range: 0 - 19 Feet

Motor: 2 pole, Single Phase

Max. Fluid Temperature Closed System: 230°F (110°C)

Min. Fluid Temperature for UP15: 36°F (2°C)

Minimum Pressure Temp Requirements:

Competitive Cross Reference

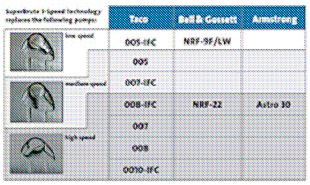

SuperBrute 3-Speed Technology replaces the following pumps:	Taco	Bell & Gossett	Armstrong
low speed	005-IFC	NRF-9F/LW	
	005		
medium speed	007-IFC		
	008-IFC	NRF-22	Astro 30
high speed	007		
	008		
	0010-IFC		

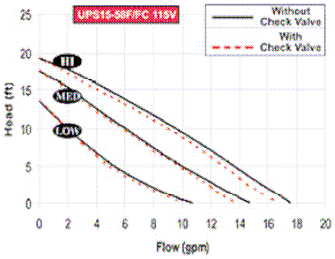

Materias of Construction:

1/25 hp pump data

UPS 15-58FC/FRC SUPERBRUTE

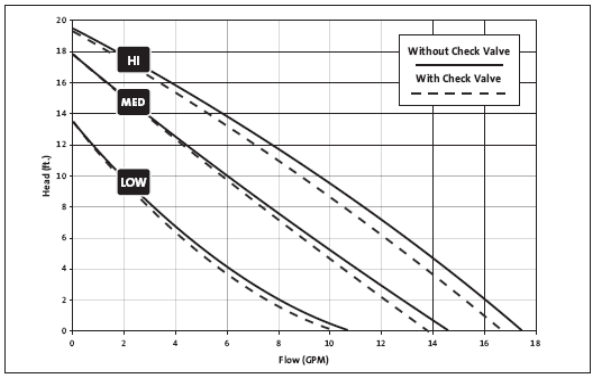

Flow range: 0 - 17.5 U.S. GPM
Head range: 0 - 19 FEET
Motors: 2 Pole, Single Phase
Maximum fluid temperature: 230°F (110°C)
Min. fluid temperature: 36°F (2°C)
Maximum working pressure: 145 PSI

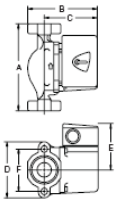

UPS15-58FC/FRC		AMPS	WATTS	HP	CAPACITOR
115V	Spd. 3	0.75	87	1/25	10mF/180V
	Spd. 2	0.66	80	1/25	10mF/180V
	Spd. 1	0.55	60	1/25	10mF/180V

This 1/25 hp three speed pump

1/6 hp pump data

UPS 26-99FC/BFC SUPERBRUTE

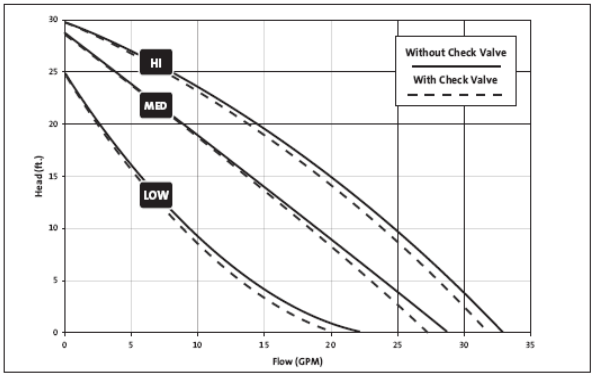

Flow range:	0 - 34 U.S. GPM
Head range:	0 - 30 FEET
Motors:	2 Pole, Single Phase
Maximum fluid temperature:	230°F (110°C)
Min. fluid temperature:	36°F (2°C)
Maximum working pressure:	145 PSI

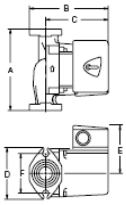

MODEL	VOLTS	AMPS	WATTS	HP	CAPACITOR
115V	Spd. 3	1.8	197	1/6	20mF/180V
	Spd. 2	1.5	179	1/6	20mF/180V
	Spd. 1	1.3	150	1/6	20mF/180V
230V	Spd. 3	0.9	196	1/6	5mF/400V
	Spd. 2	0.8	179	1/6	5mF/400V
	Spd. 1	0.7	150	1/6	5mF/400V

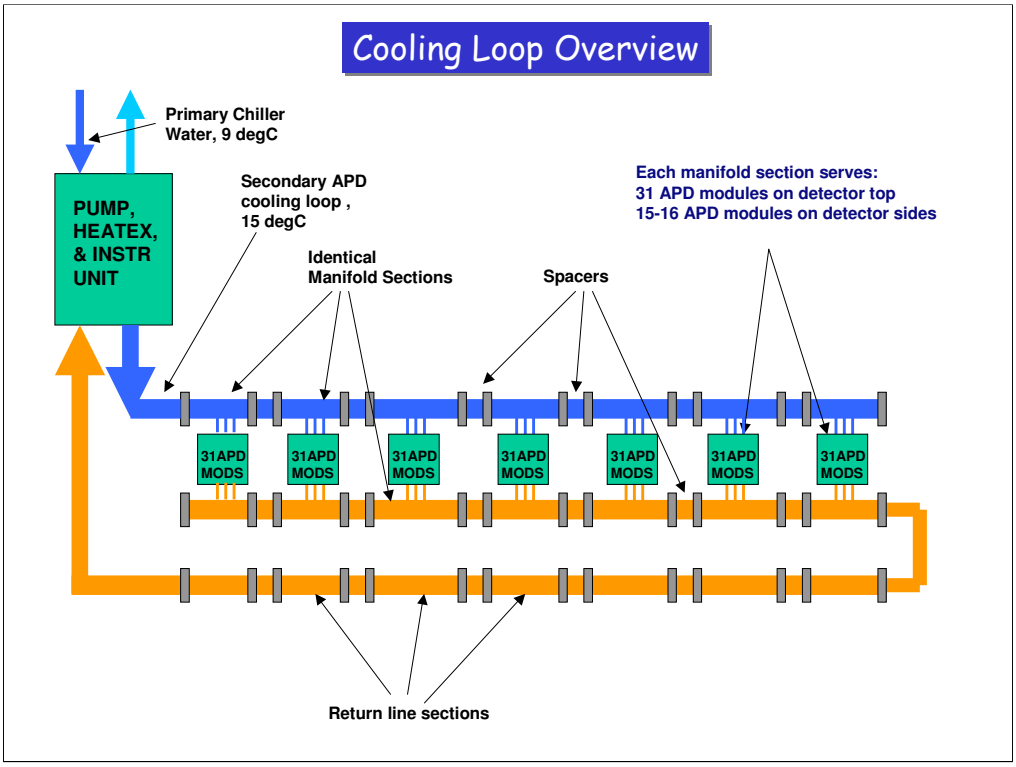

Each loop is a closed system isolated from main chill water supply by heat exchanger.

Each loop starts at a unit containing the pump, heat exchanger, fluid reservoir, and remote I/O(more in later slide)

Water is delivered to APDs by 1/4'' hoses connected to modular manifold units used in both supply and return side of loop.

Water comes back in return line sections of same length as manifolds.

Manifold sections are designed to serve a block of 62 planes, so that cooling system can be assembled and run incrementally as detector is built up if necessary.

For 25kton detector, with 27 blocks of 62 planes, there would be 3 zones with loops 7 manifold sections long, and 1 zone of loops 6 manifold sections long.

Lookout Screenshot 1

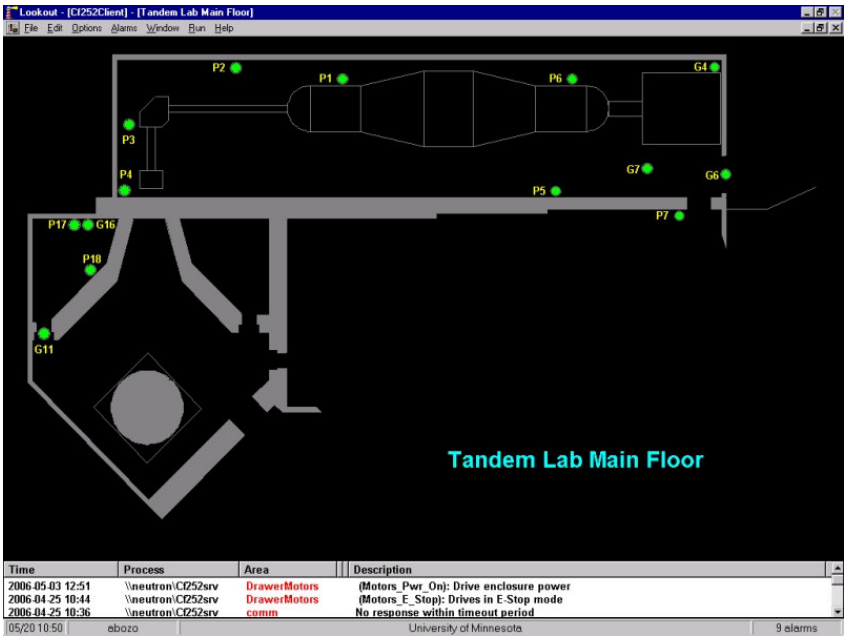

Example from our system at Tandem Lab running application in NI Lookout. Has been running for 5+ yrs, using Fieldpoint I/O units.

System is relatively small, with ~50 I/O points, with server and client applications running on same computer. Lookout can handle much larger distributed client/server systems.

Shows client floor plan graphic with status of survey stations.

Alarm manager present at bottom in all screens.

Lookout Screenshot 2

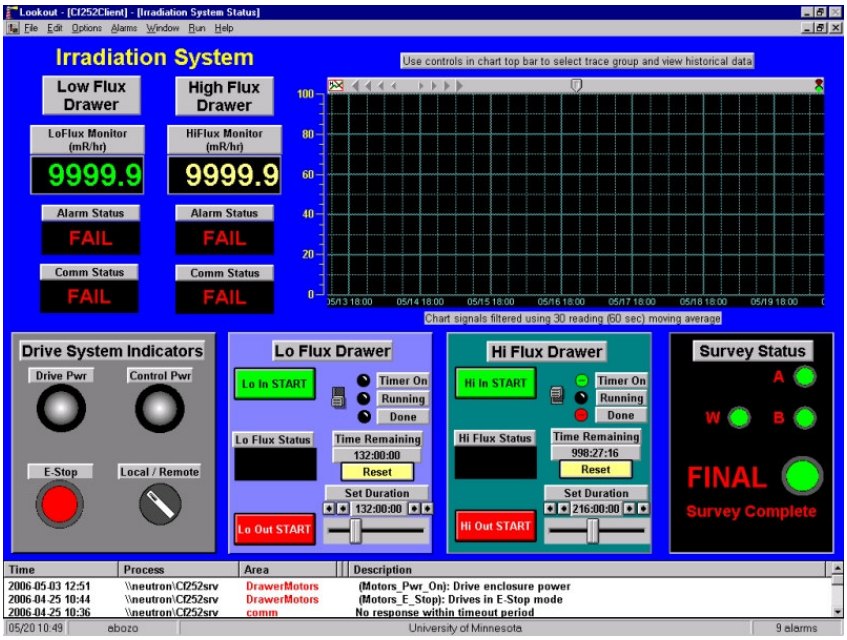

Another example from Cf 252 system at Tandem Lab This was grabbed after the Cf252 was returned to ORNL, and area monitors were disconnected, hence communication failure warnings and upscale radiation readings.

Lookout Chart Example

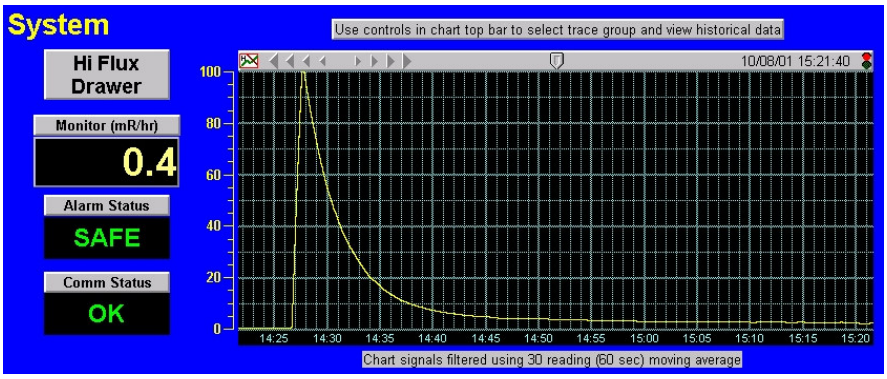

Lookout saves data in the Citadel SQL database. Example of Lookout chart object, which queries the SQL database, and can scroll back as far as the database has history.

This is from Tandem Lab showing decay of irradiated APDs in Oct 2001.