REV	DESCRIPTION	DRAWN	DATE
		APPROVED	DATE

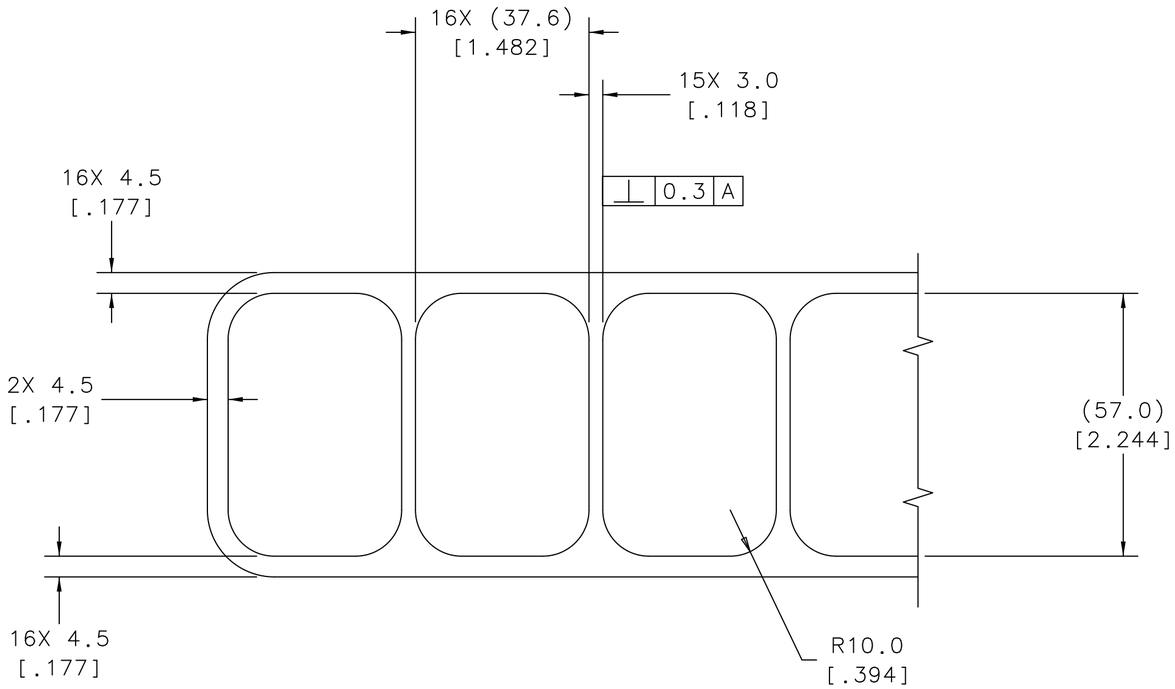

DETAIL A
SCALE = 1:1

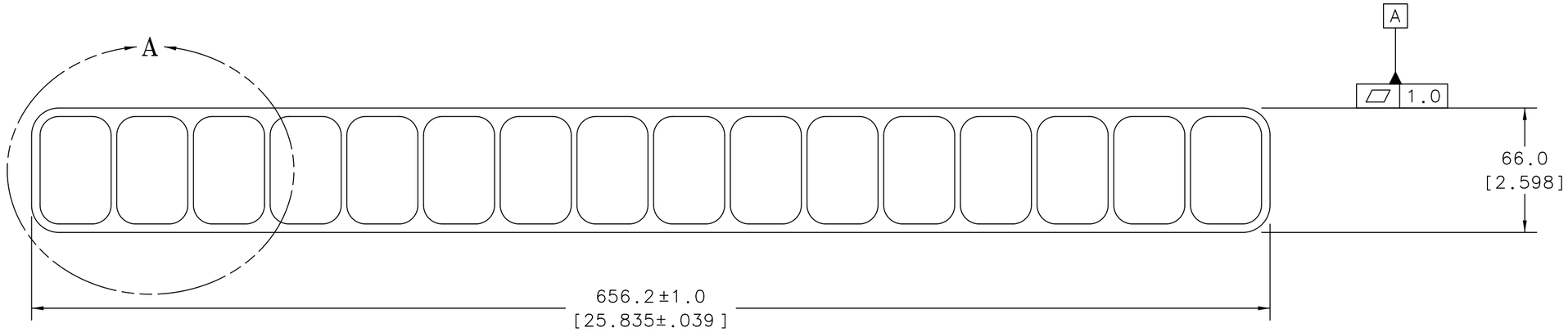

3. THIS DWG WAS REFERENCED FROM ARGONNE NATIONAL LABORATORY DWG #NOVA100-4.

2. EXTRUSION CROSS SECTIONAL AREA IS 9,045.7 sq/mm (14.02 sq/in)

1. EXTRUSIONS SHALL BE STRAIGHT WITHIN 1.5mm PER 1M (.049 PER 3.28 FT)

NOTES:

UNLESS OTHERWISE SPECIFIED			ORIGINATOR	V.GUARINO	26-APR-2006
.X	.XX	ANGLES	DRAWN	D.FRIEND	04-MAY-2006
± .5	± ---	± 1°	CHECKED		
1. BREAK ALL SHARP EDGES .4 MAX. 2. DO NOT SCALE DRAWING. 3. DIMENSIONS BASED UPON ASME Y14.5M-1994 4. MAX. ALL MACH. SURFACES 3.2 5. DRAWING UNITS: mm			APPROVED		
			USED ON		
			MATERIAL	PVC	

FERMI NATIONAL ACCELERATOR LABORATORY
UNITED STATES DEPARTMENT OF ENERGY

NOVA
EXTRUSION PROFILE
16 CELL PROFILE - FLAT BACK

SCALE	DRAWING NUMBER	SHEET	REV
1:2 AS NOTED	9219.000-MC-435800	1 OF 1	

CREATED WITH : Ideas11NXSeries | GROUP: PPD/MECHANICAL DEPARTMENT

8:59:48 a.m. 05-04-06