REV	DESCRIPTION	DRAWN / APPROVED	DATE / DATE
A	1.CHNG'D TOLERANCES FROM 1.0 [0.39] TO 3.0 [.118] AND 0.2 TO 1.0. 2.ADDED TOLERANCE OF 1.0 [0.39] TO 66.0 DIMENSION. 3.CHG'D NOTE 1 TOLERANCE FROM .25mm TO 1.5mm AND .010 TO .049. 4.CHG'D TOLERANCE BLOCK .X TOLERANCE FROM .1 TO .5. 5.ADDED TOLERANCE OF +.1 [+.004] AND -.0 [-.000] TO 3 DIM'S.	D.FRIEND	07-OCT-2005
		C.GROZIS D.PUSHKA	07-OCT-2005 07-OCT-2005
B	CHANGED TOLERANCE FROM .1 [.004] TO 1.0 [.039], 4-PLACES.	B.CYKO	14-OCT-2005
		C.GROZIS D.PUSHKA	14-OCT-2005
C	CHG'D CELL DIMENIONS TO AGREE WITH VENDOR TOOLING DIMENSIONS. CHG'D NOTE 2 FOR NEW CROSS SECTIONAL AREA.	D.FRIEND	04-JAN-2006
		C.GROZIS D.FRIEND	04-JAN-2006

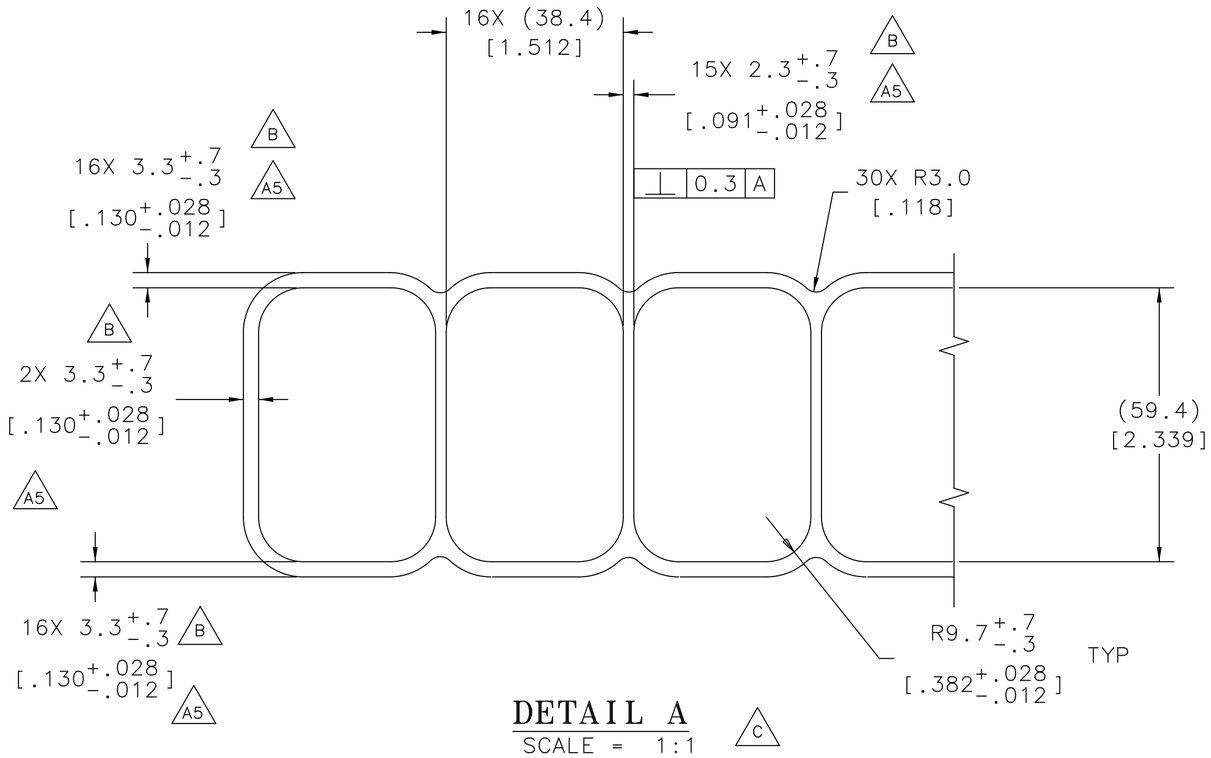

DETAIL A
SCALE = 1:1

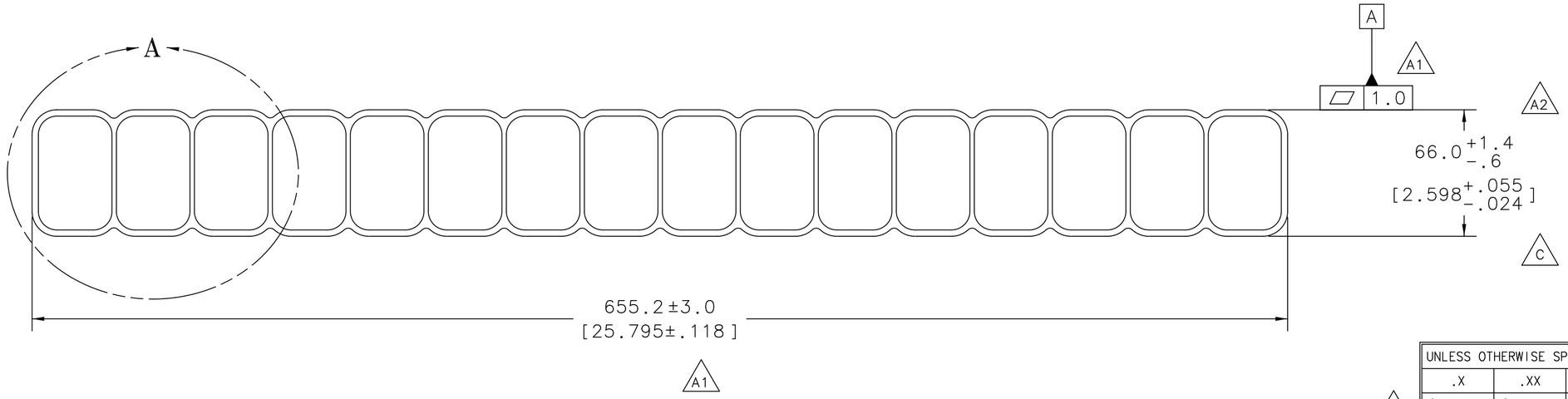

UNLESS OTHERWISE SPECIFIED			ORIGINATOR	V.GUARINO	25-AUG-2005
.X	.XX	ANGLES	DRAWN	D.FRIEND	25-AUG-2005
± .5	± ---	± 1°	CHECKED	V.GUARINO	25-AUG-2005
			APPROVED	J.COOPER	25-AUG-2005

1. BREAK ALL SHARP EDGES .4 MAX.
2. DO NOT SCALE DRAWING.
3. DIMENSIONS BASED UPON ASME Y14.5M-1994
4. MAX. ALL MACH. SURFACES 3.2
5. DRAWING UNITS: mm

USED ON

MATERIAL
PVC

FERMI NATIONAL ACCELERATOR LABORATORY
UNITED STATES DEPARTMENT OF ENERGY

NOVA
EXTRUSION PROFILE
16 CELL PROFILE

SCALE	DRAWING NUMBER	SHEET	REV
1:2 AS NOTED	9219.000-MC-435388	1 OF 1	C

CREATED WITH : Ideas11NXSeries | GROUP: PPD/MECHANICAL DEPARTMENT

3. THIS DRAWING WAS REFERENCED FROM ARGONNE NATIONAL LABORATORY DWG. #NOVA100-2.

2. EXTRUSION CROSS SECTIONAL AREA IS 6860.0 sq/mm (10.63 sq/in)

A3 1. EXTRUSIONS SHALL BE STRAIGHT WITHIN 1.5mm PER 1M (.049 PER 3.28 FT)

NOTES:

7:48:52 a.m. 01-25-06