Extrusion Modules – The Active Detector

Ken Heller

University of Minnesota

Argonne, Fermilab, Indiana, Minnesota, + ??

Talks by:
Tom Chase – Progress on End Seals and Leak Detection QA
Alex Smith – Module Factory Description
Dan Cronin-Hennessy – Module Factory Challenges

Outline

- **Module Design – A Reminder**
- **Level 3 Tasks and Managers**
- **Needs and Opportunity**

NOνA PVC Module (23,808)

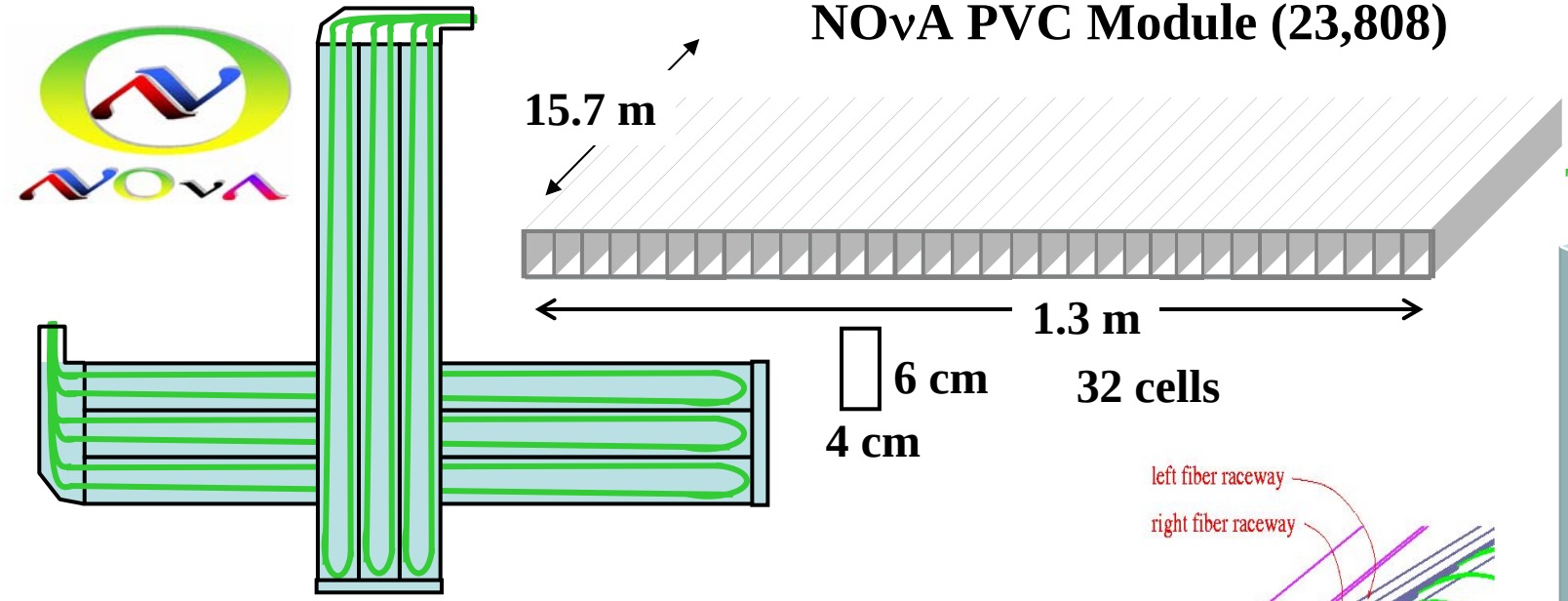

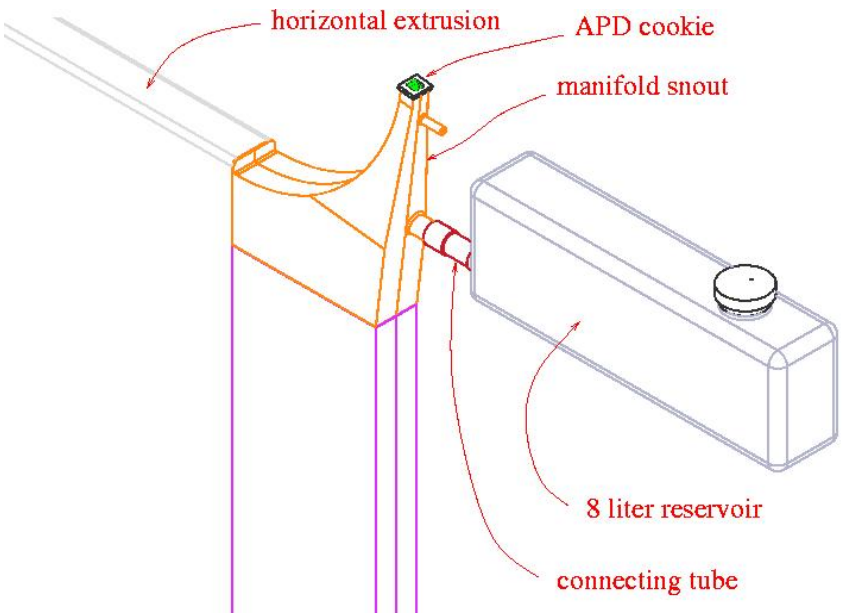

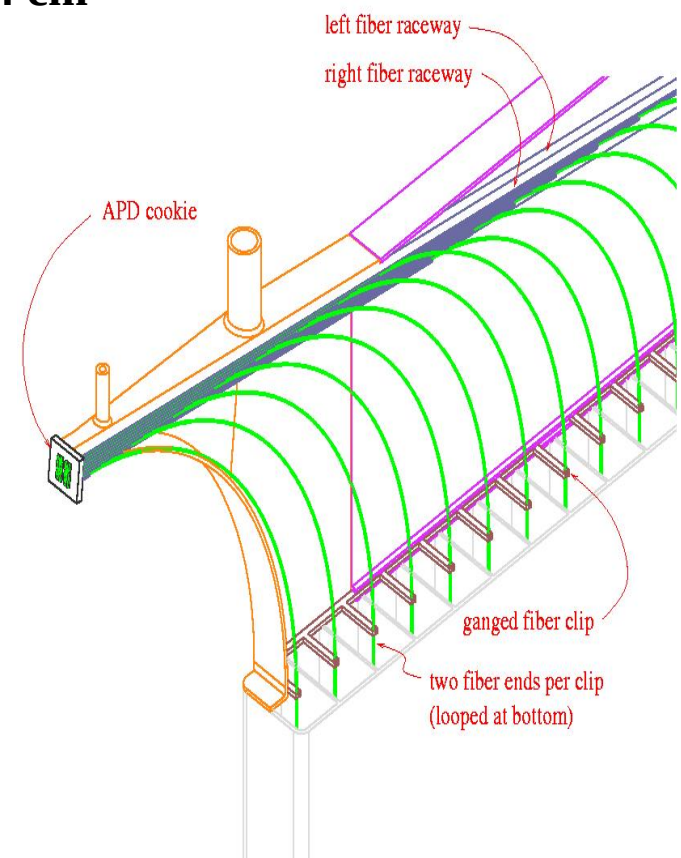

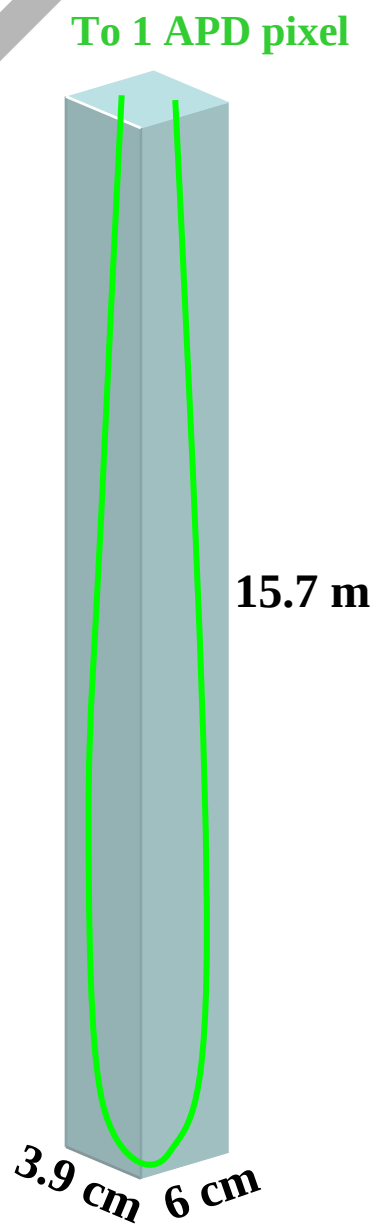

Tom Chase
Hans Jostlein

Level 3 Tasks

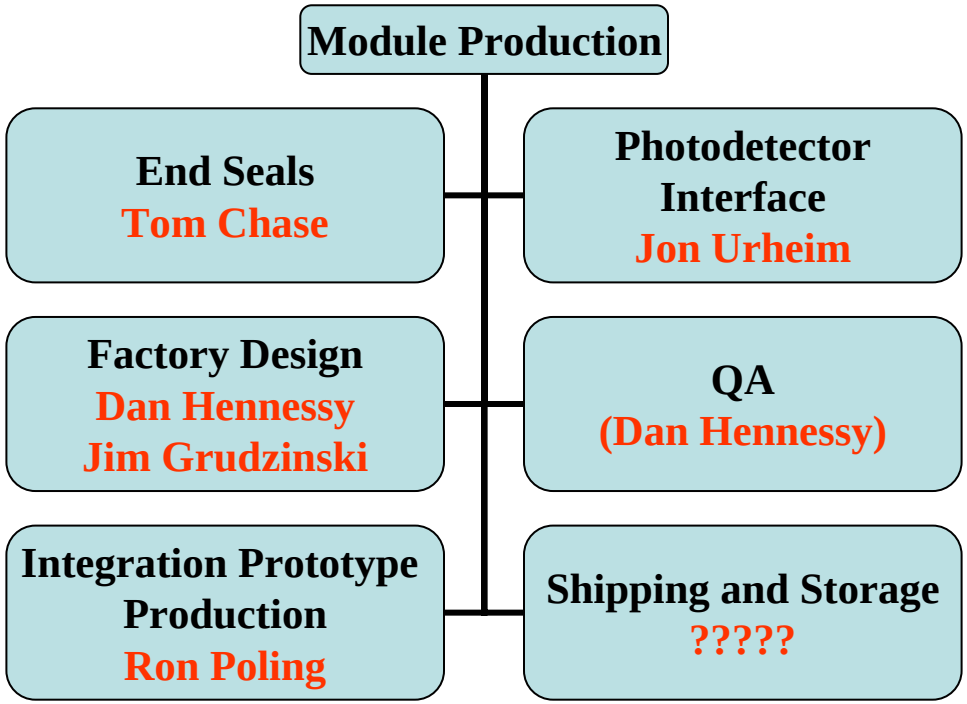

R & D
Construction
WBS (Costs, Schedules)
CDR, TDR

Extrusion Modules

Methods

Gluing

Light Seal

End Plates

Machines

End Seals
Tom Chase

Manifolds

Fibers

Factory Design
Dan Hennessy
Jim Grudzinski

Modules

Cookies

Integration Prototype
Ron Poling

Fibers

Alignment

Layout

Photodetector Interface
Jon Urheim

Extrusions

Shipping and Storage
?????

Electronics

QA
(Dan Hennessy)

3 Factories

Fiber Continuity

Leaks

Light tight

Near Detector

Far Detector